OPERATING INSTRUCTIONS

2DNR 3-Axis Gimbal Vari-focal Vandal Resistant Dome Camera

Before installing and using the camera, please read the instructions thoroughly and retain them for reference.

Caution

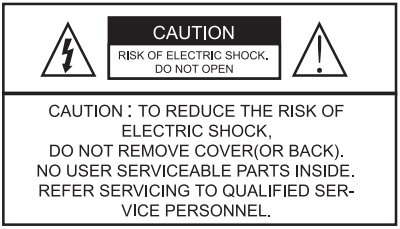

This symbol is intended to alert the user to the presence of noninsulated “dangerous voltage” within the product’s enclosure that may be of sufficient magnitude to constitute a risk of electric shock to persons.

The exclamation point within an equilateral triangle is intended to alert the user to the presence of important operating and maintenance (servicing) instructions in the literature accompanying the product.

Warning

To prevent fire or shock hazard, do not expose this appliance to rain or moisture.
To avoid electrical shock, do not open the cabinet.
Refer servicing to qualified personnel only.
Wiring methods shall be in accordance with the National Electric Code.

This product is manufactured to comply with the CE and FCC Certificate standard.

Contents

Composition

Confirm that the following parts are included:

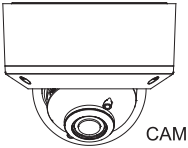

CAMERA

DRIVER

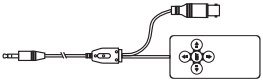

SERVICE MONITOR & CONTROL CABLE

INSTRUCTION MANUAL

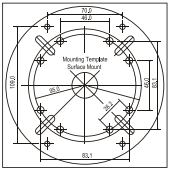

MOUNTING TEMPLATE

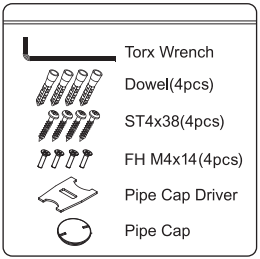

- **Torx Wrench:** Length 90mm (1pc)
- **Dowel:** Length 30mm, Thickness 6mm (4pcs)
- **Assembly Screws:** FH M4x14 (4pcs)
  - These screws are used to affix flush mount base to surface mount plate.
- **Mounting Screws:** ST4x38 (4pcs)
  - These screws are used to mount both surface mount plate or flush mount base to a sturdy surface. If necessary, use the dowels included.
- **Pipe Cap Driver:** (1pc)
  - This is used to open/close the pipe cap of surface mount plate.
- **Service monitor and control cable:**
  - Monitoring the display screen through portable monitor and adjusting the OSD menu of the camera externally.

Features

- 1/3” Sony Super HAD II High-resolution Color CCD
- 600TVL High-Resolution
- 2.8 ~ 10.5mm Vari-Focal, DC Auto Iris F1.2 Lens
  - Option: 2.8~11mm F1.2, 3.8~9.5mm F1.2
- Built-in DNR, OSD function
- Back Light or High Light Compensation(BLC/HLC) function
- Color & B/W Auto switchable by photocell (Day&Night type)
- Auto switching IR LED control by photocell (36pcs-IR LED type)
- Easy Adjustment of Focal Length & Focus
- Built-in Service Monitor & OSD Control Port
- 3-Axis Gimbal Bracket
- Flush & Surface mount
- Fan & Heater available (Option)
- Vandal Resistant & Weatherproof Housing (IP-66)
- Power: AC24V/DC12V or DC12V

Dimensions (Unit:mm)

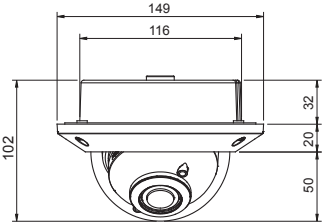

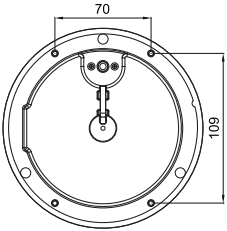

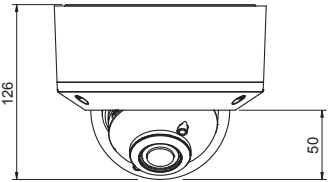

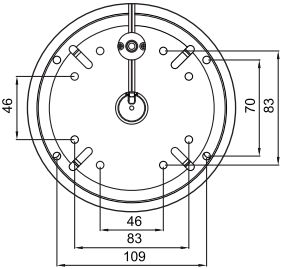

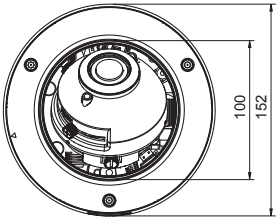

Parts Name and Description

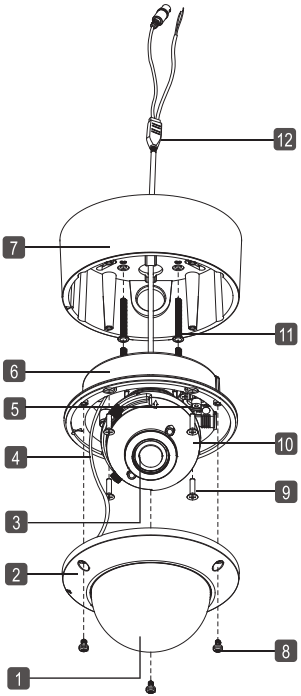

1. Bubble
2. Dome Cover Ring
3. Lens
4. Safety Wire
5. Service Monitor Output Port
6. Flush Mount Base
7. Surface Mount Plate
8. Assembly Screws (M4x8)
9. Assembly Screws (FH M4x14)
10. Gimbal-Bracket
11. Mounting Screws (ST4x38)
12. Video/Power Cable

AC24V/DC12V TYPE

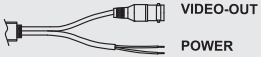

DC12V TYPE

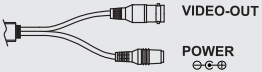

Caution!

To avoid smear, do not expose the camera directly to a strong light source such as the sun or spot light.

Installation

1. Remove dome cover by loosening 3 screws.
Use supplied Torx wrench.

2. Surface Mount :
Use four ST4x38 screws, mount surface plate to a sturdy surface.
Use four M4x14 screws, affix flush mount base to surface plate.
(For flush mount application, disregard this section.)

3. Flush Mount :
Use four ST4x38 screws, affix flush mount base to a sturdy surface.

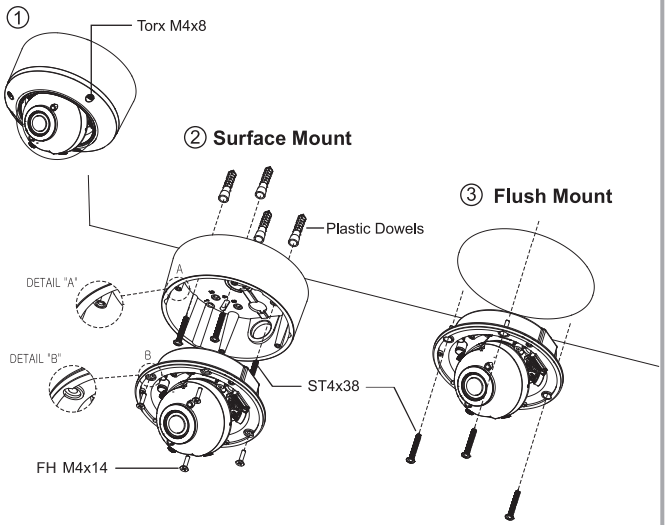

Mounting Housings to Electrical Junction Boxes

Either flush mount or surface mount application, pre-drilled mounting holes on.
Dome housing accommodate various electrical junction boxes, making installation easy and less time consuming.

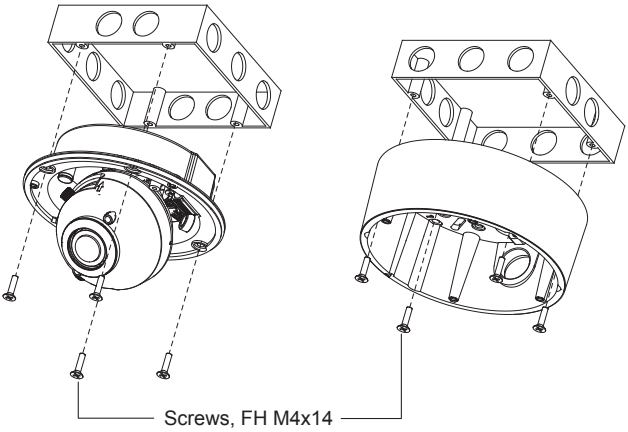

Note

Screws required for electrical junction boxes are not supplied with the package. These screws are readily available at local electrical supply stores.

Connections

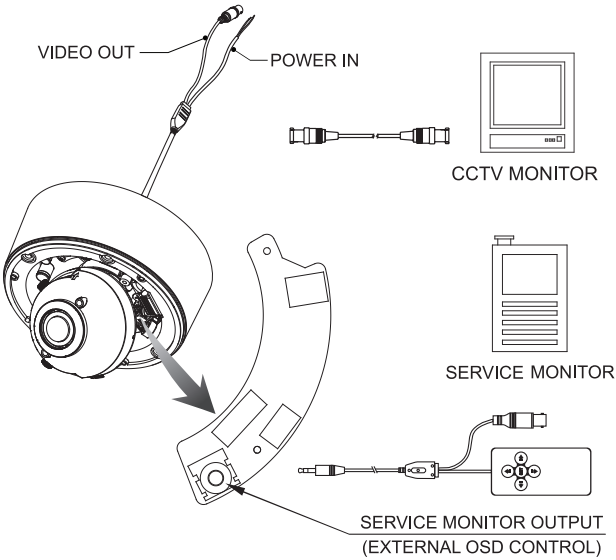

- Power connection: Requires DC12V or AC24V input depending on camera model.
- All camera models are supplied with service monitor output the inside units.

Note

If you need to set up OSD menu, use the service monitor and control cable.

3-Axis Gimbal Adjustments

1. Pan: Adjust the first pan angle by turning the gimbal 360°. (see figure No.1)

2. Tilt: Adjust the tilt angle by moving the gimbal up and down. (see figure No.2)

3. Rotation: Loosen the pan screw (No.3) to adjust the pan to desired angle and fix the screw. (see figure No.4)

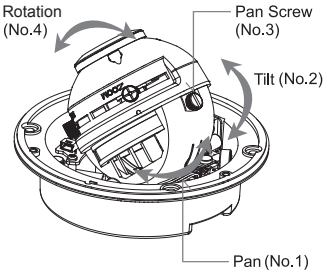

Zoom & Focus Adjustments

1. If you require to make focal / focus adjustments, loosen the lever bolt and make necessary adjustments.

2. Loosen Zoom& Focus lever bolt and make the viewing angle / focus as shown.
   - Field of View: Telephoto(T) to Wide(W)
   - Focus: Near(N) to Infinity(∞)

3. After adjustments, tighten the lever bolts to lock.

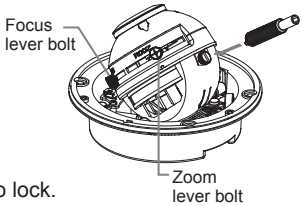

ZOOM/FOCUS LEVER DETAIL VIEW

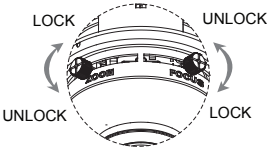

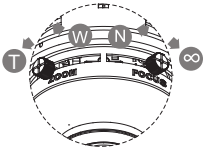

f=2.8~10.5mm

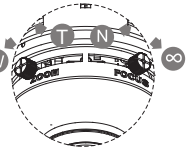

f=2.8~11mm, 3.8~9.5mm

OSD Menu Instructions

1. OSD Control Key (Service Monitor and Control Cable)

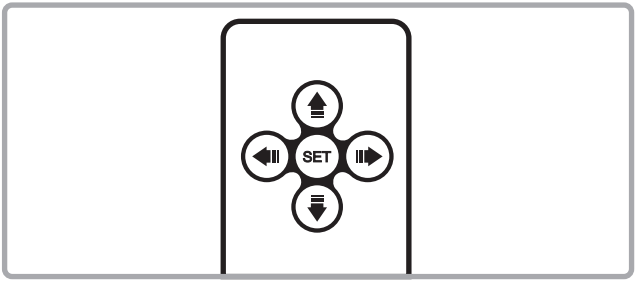

■ OSD Menu Control

> SET Key: Access to the menu or confirm the setting.
To enter the main menu, press the SET Key once.

> UP/DOWN Key (▲▼) : Choose the desired sub-menu.

> LEFT/RIGHT Key (◀ ▶) : Set up the value of the selected menu.
Used to adjust the desired menu selection, and to move the cursor left or right.

2. Menu Table

MAIN MENU	CONFIGURATION		
LENS	DC		
EXPOSURE	SHUTTER	AUTO,1/60,FLK,1/250,1/500, 1/1000,1/2000,1/4000,1/10000	
	BRIGHTNESS	0~255	
	AGC	OFF, LOW, MIDDLE, HIGH	
	DWDR	ON/OFF	
	RETURN	RET/END	

WHITE BAL.	ATW1		
	ATW2		
	AWC->SET	AWC->SET (PUSH)	
	MANUAL	COLOR TEMP.	MANUAL
		BLUE	0~255
		RED	0~255
		RETURN	RET/END
		COLOR TEMP.	INDOOR
		BLUE	--
		RED	--
		RETURN	RET/END
		COLOR TEMP.	OUTDOOR
		BLUE	--
		RED	--
		RETURN	RET/END
BACKLIGHT	OFF		
	BLC	AREA SEL	AREA1/AREA2
		AREA STATE	ON/OFF
		GAIN	0~255
		HEIGHT	0~15
		WIDTH	0~15
		LEFT/RIGHT	0~15
		TOP/BOTTOM	0~15
		RETURN	RET/END
	HLC	LEVEL	0~255
		MODE	ALL DAY
			NIGHT ONLY
		RETURN	RET/END

IMAGE ADJ.	LENS SHAD.	ON/OFF	
	2DNR	ON/OFF	
	MIRROR	ON/OFF	
	FONT COLOR	FRONT	0~15
		ID & TITLE	0~15
		RETURN	RET/END
	CONTRAST	0~255	
	SHARPNESS	0~31	
	DISPLAY	CRT	PED LEVEL(0~63)
			COLOR GAIN(0~255)
			RETURN(RET/END)
		LCD	GAMMA(0.05~1.00)
			PED LEVEL(0~63)
			COLOR GAIN(0~255)
			RETURN(RET/END)
		USER	GAMMA(0.05~1.00)
			PED LEVEL(0~63)
			COLOR GAIN(0~255)
			RETURN(RET/END)
	NEG. IMAGE	ON/OFF	
	RETURN	RET/END	
SPECIAL	CAM TITLE	ON/OFF	
	DAY&NIGHT*	AURO/COLOR/BW/EXT	
	MOTION	AREA SEL.	AREA1~AREA4
		AREA STATE	ON/OFF
		HEIGHT	0~15
		WIDTH	0~15
		LEFT/LIGHT	0~15

SPECIAL	MOTION	TOP/BOTTOM	0~15
		DEGREE	0~255
		VIEW	ON/OFF
		RETURN	RET/END
	PRIVACY	AREA SEL.	AREA1~AREA8
		AREA STATE	ON/OFF
		HEIGHT	0~15
		WIDTH	0~15
		LEFT/LIGHT	0~15
		TOP/BOTTOM	0~15
		COLOR	0~15
		RETURN	RET/END
	DPC	AUTO DEFECT(64 point)	
	VERSION	00,00,01	
	RETURN	RET/END	
RESET	FACTORY	RESET	
	RETURN	RET/END	
EXIT			

DAY&NIGHT * :
Standard type cameras do not support the DAY&NIGHT function.

3. Menu Setup

The Setup is used to control and adjust the many features and options available on your camera. Read thoroughly before making any adjustments.
Note: These options have been pre-configured at the factory for optimal performance.

1) Press the SET key to acess the menu mode.
2) Select the desired feature by using UP/DOWN keys.

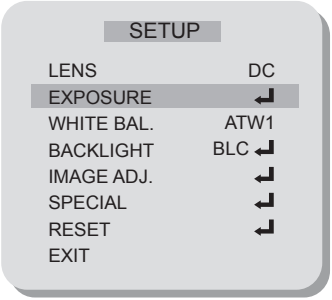

LENS

This is always set on DC and cannot be changed.

EXPOSURE

- **SHUTTER: (AUTO, FLK, 1/60(1/50) ~ 1/100,000)**

The SHUTTER speed can be selected manually to user preference. Typically, to track fast moving objects across your screen, a faster shutter speed is used. The shutter speed of 1/60(NTSC), or 1/50(PAL) seconds are recommended.

> AUTO: Select the AUTO mode for automatic adjustment of the shutters. It will slow down or speed up depending on the environment.
> FLK: Select the FLK mode if the screen flickers due to differences in light and electric frequencies.

- **BRIGHTNESS: 0~255**

  The BRIGHTNESS can be adjusted by opening and closing of the Iris aperture. User may fine-tune the screen to their preferred brightness. The brightness ranges from 0~255.(0 being the darkest and 255 being the brightest possible)

- **AGC (Automatic Gain Control) : OFF, LOW, MIDDLE, HIGH**

  This function is used to amplify the video signal when it falls below the set parameter. As the AGC level increase, the overall screen gets brighter but the level of noise is increased.

  Note: The AGC feature cannot be modified while Day&Night mode is set to AUTO. By factory default, AGC is automatically set on “MIDDLE”.

- **DWDR (Digital Wide Dynamic Range): ON, OFF**

  Wide Dynamic Range works to correct excessive light within the frame to produce a usable image.
  It works by calculating the ratio between the brightest and darkest values of the picture and determines the balanced medium.

- **RETURN: RET, END**

  Selects “RET” to go back to the main menu. Select “END” to save and exit.

WHITE BAL.

This function is used to control the while balance under different lighting conditions. Adjusting this setting calibrate the camera for correct color rendering. The factory default of ‘ATW1’ is recommended for optimal performance.

- **ATW1 (Auto Tracing White Balance mode 1):**

  Select the ATW1 mode to automatically adjust the color temperature according to its ambient condition. (2,300~9,500K)

- **ATW2:**

  Select the ATW2 mode if the color temperature of the light source is between 2,000~11,000K.

- **AWC (Auto White Balance Control):**

  Use the AWC function to correctly calibrate the white balance of the camera. While in this mode, press the SET key while placing a white sheet of paper in front of the camera. Repeat this procedure if there is a change in location or light source.

- **MANUAL: INDOOR, OUTDOOR, MANUAL**

  If you press the SET key, you can adjust color temperature manually.
  The Blue and Red values can be adjusted independently only in the Manual mode.
  - INDOOR: Sets the color temperature properly for the indoor condition.
  - OUTDOOR: Sets the color temperature properly for the outdoor condition.
  - MANUAL: Adjust the strength of the red color or the blue color manually.

BACKLIGHT

This function is used to compensate for exposure problem associated with extremly bright backgrounds causing the subjects to bloom or silhouette.

- **BLC (Back Light Compensation):**

  The BLC divides the frame and calculates exposure levels of each zone to counterbalance excessive background light in order to distinguish the subject in the foreground. There are 2 white boxes representing the areas affected by BLC. Each boxes can be individually adjusted to user preference.

> AREA SEL. (AREA1~AREA2): Choose one of two pre-defined boxes to adjust its size or location.
> AREA STATE (ON, OFF): Select a box active or inactive for BLC.
> HEIGHT, WIDTH: Adjust the height or width of the area.
> LEFT/RIGHT, TOP/BOTTOM: Changes the location of the defined area.
> RETURN: Select RET to save and exit, and to go back to the MAIN MENU.

- **HLC (High Light Compensation):**

The HLC masks out excessively bright areas within the frame and compensates the rest accordingly.

> LEVEL(0~255): Choose the intensity of the HLC.
> MODE(ALL DAY, NIGHT ONLY): Choose the preferred mode. 'ALL DAY' keeps the HLC mode on day or night, and 'NIGHT ONLY' only during night mode.

IMAGE ADJ.

- **LENS SHAD. : 0~255**

Convex shape of the lens causes the light to enter the camera unevenly and typically makes the center of the screen brighter than the rest. Adjusting this setting will compensate for this undesirable effect and make the screen more even.

- **2DNR (Digital Noise Reduction) : ON, OFF**

The DNR improves picture quality by filtering out signal noise associated with night-time recording. DNR compares pictures from a frame with the one previous and removes noise grains not present before.

- **MIRROR : ON, OFF**

This function is used to inverse the pictures coming from the camera.

- **FRONT COLOR**

  Change the OSD menu front color to user preference when there isn't enough contrast between the picture and the menu to distinguish the letters.

> FRONT: Choose from the 15 available colors.
> ID&TITLE: Choose from the 15 available colors.

- **CONTRAST: 0~255**

  Adjust the contrast of image, the difference between light and dark areas on the screen.

- **SHARPNESS: 0~31**

  Adjust the display image sharpness.

- **DISPLAY: CRT, LCD, USER**

  Selecting the correct type of viewing monitor will ensure the most optimal picture.

- **NEG. IMAGE: ON, OFF**

  This function reverses the pictures to view in inverse.
  Light to dark and vice versa.

- **RETURN**

  Selects "RET" to save and exit, and to go back to the MAIN MENU.

SPECIAL

This function is used to control the CAMERA TITLE, DAY&NIGHT, MOTION, PRIVACY, DPC, and display the VERSION number of the camera.

- **CAM TITLE: ON, OFF**

  The CAMERA TITLE is used to assign a number or a custom title to easily identify between the many cameras that may be connected to your DVR.

Programing the Camera ID:

1. Press the LEFT or RIGHT key to turn On the Camera Tiltle mode.
2. While Camera ID function is On, press the SET key to enter the sub-menu.
3. Using the directional navigation keys, choose from alphabetical letters and numbers to create a 15-digit Camera ID.
4. Move the cursor to POS and press the SET key.
   The Camera ID will appear on the bottom center.
5. Using the directional navigation keys, change the position of the Camera Title to the desired location.
6. Move the cursor to END, then press the SET key to save and exit.

- **DAY & NIGHT : AUTO, COLOR, B/W, EXT**

  This funciton is used to control the color setting during daytime and night-time operation.

Standard Type Camera

> Not available

: Standard type cameras do not support the DAY&NIGHT function.

Day&Night Type Camera

> AUTO, COLOR, B/W, EXT

: Day&Night type cameras have the inner photocell. This function is an auto switching between DAY and NIGHT mode using the detected brightness level by photocell.

IR-LED Type Camera

> AUTO, COLOR, B/W, EXT

: Choose from the AUTO, COLOR, B/W, EXT modes

> AUTO: The Color mode is operated during daytime and automatically converts to B/W mode in the absence of light during night-time.
AGC cannot be modified in this mode.

D => N Level -
This level determines the level of darkness before switching from Day mode to Night mode.
D => N Delay -
This function is used to set the delay between switching of the modes.
If the delay has been set to ‘3’, the camera will observe darkness for at least 3 seconds before switching to Night mode.
N => D Level - Opposite of D => N Level.
N => D Delay - See above D => N Delay.

> COLOR: The camera is always in Color mode.

> B/W: The camera is always in B/W mode.

BURST OFF - This function smooths out noise in BW mode.
BURST ON - This function makes the transition between switching of the modes smoother when Color turns to BW.
IR SMART (ON/OFF) - This function detects too much IR reflection and automatically compensates for the over exposure. Specific area can be defined by adjusting the location and size of the detection grid.
IR LEVEL (HIGH/LOW) - This function is used to higher or lower the IR LED intensity.

> EXT: This feature is not supported.

- **MOTION : ON, OFF**

This function is used to detect motion in the monitored area.
The “Running Man” icon will be displayed on the bottom left corner once motion has been detected. There are 4 pre-defined white boxes representing the areas monitored for motion. Each boxes can be individually adjusted to user preference.

> AREA SEL. (AREA1~4): Choose one of four pre-defined boxes to adjust its size or location.
> AREA STATE (ON,OFF): Select a box active or inactive for motion detection.
> HEIGHT, WIDTH: Adjust the height or width of the area.
> LEFT/RIGHT, TOP/BOTTOM: Changes the location of the defined area.
> DEGREES (0~255): Increases or decreases the sensitivity of the selected area. Increasing the number decreases sensitivity.
> VIEW (ON,OFF): Turns the “Running Man” indication On or Off.
> RETURN: Select RET to save and exit, and to go back to the MAIN MENU.

- **PRIVACY : ON, OFF**

This function is used to mask specific areas within the frame of the camera to be concealed. There are total of 8 different colored boxes representing the masked areas. Each boxes can be individually adjusted to user preference.

> AREA SEL. (AREA1~8): Choose one of 8 colored boxes to adjust its size or location.
> AREA STATE (ON,OFF): Select a box active or inactive for privacy masking.
> HEIGHT, WIDTH: Adjust the height or width of the area.
> LEFT/RIGHT, TOP/BOTTOM: Changes the location of the defined area.
> COLOR (1~15): Choose one of 15 colors for the masked area.
> VIEW (ON,OFF): Turns the “Running Man” indication On or Off.
> RETURN: Select RET to save and exit, and to go back to the MAIN MENU.

- **DPC (Dead Pixel Compensation)**

This function is used to compensate for the dead pixel areas of the screen. When a defective pixel is detected, a neighboring pixel information is used to determine the approximate pixel data and is replaced. The DPC is capable of compensating up to 64 points of dead pixels.

- **VERSION**

The camera firmware version is displayed.

- **RETURN**

  Selects “RET” to save and exit, and to go back to the MAIN MENU.

RESET

This function is used to reset all camera settings to the factory default settings.

EXIT

Choose EXIT to save and exit from the menu mode.

Fan & Heater Specifications (Option)

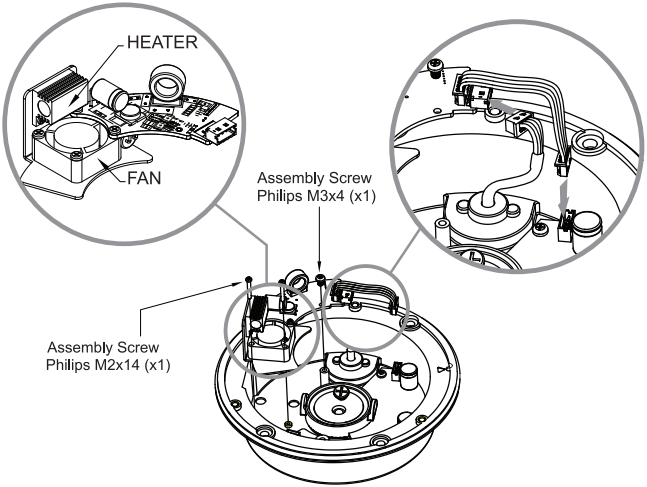

Power Input	AC24V
Power Consumption (Heater)	10W
Power Consumption (Fan)	0.7W
Heater ON	at 41°F (5℃)
Heater OFF	at 50°F(10℃)

Note

- For Fan & Heater operation, AC24V power input is required.
- UTP models and DC12V operation models are not supported Fan & Heater function.

Specifications

■ Common Specification

ITEM	NTSC	PAL
Image Sensor	1/3” Interline Transfer Type Color CCD (Sony)	
Effective Pixels	768H x 494V (380K pixels)	752H x 582V (440K pixels)
Scanning System	525 Lines 2:1 Interlace	625 Lines 2:1 Interlace
Scanning Frequency	15.734KHz(H), 59.94Hz(V)	15.625KHz(H), 50Hz(V)
Shutter Speed	1/60sec, FLK, Auto(1/60 ~ 1/100,000sec)	1/50sec, FLK, Auto(1/50 ~ 1/100,000)sec
S/N Ratio	More than 48dB (AGC Off)	
Sync. System	Internal	
White Balance	ATW1 / ATW2 / AWC / Manual (ATW1: 2,300 ~9,500°K, ATW2: 2,000 ~11,000°K)	
OSD	Built-in	
DNR	On/Off	
DWDR	On/Off	
Video Output	VBS 1.0 Vp-p (75Ω Load)	
Power Supply(*)	AC24V/DC12V±10%, DC12V±10%	
Operating Temp.	-10˚C ~ +50˚C	
Operating Humidity	Max. 90% RH	
Dimension	152mm(Ø) × 126mm(H)	

(*) Use regulated & specified power supply.

Specifications

Standard Type		
Resolution	600TVL	
Min. Illumination	0.2Lux @F1.2	
Lens	f = 2.8~10.5mm Vari-Focal, DC Auto Iris F1.2 Lens (Option: 2.8~11mm F1.2, 3.8~9.5mm F1.2)	
Power Consumption	DC12V	Max.: 100mA/DC12V
	AC24V/DC12V	Max.: 4.8VA/AC24V, 150mA/DC12V

Day & Night Type		
Resolution	600TVL(Color), 650TVL(B/W)	
Day&Night Functionality	ICR type on EXT(photocell)	
Min. Illumination	0.2Lux (Color), 0.02Lux (B/W) @F1.2	
Lens	f = 2.8~10.5mm Vari-Focal, DC Auto Iris F1.2 D/N Lens (Option: 2.8~11mm F1.2, 3.8~9.5mm F1.2)	
Power Consumption	DC12V	Max.:110mA/DC12V
	AC24V/DC12V	Max.:5.1VA/AC24V, 160mA/DC12V

IR-LED Type		
Resolution	600TVL(Color), 650TVL(B/W)	
Day&Night Functionality	ICR type on AUTO(photocell)	
Min. Illumination	0 Lux (IR-LED On)	
Lens	f = 2.8~10.5mm Vari-Focal, DC Auto Iris F1.2 D/N Lens (Option: 2.8~11mm F1.2, 3.8~9.5mm F1.2)	
Power Consumption	DC12V	Max.:390mA/DC12V(IR-LED On)
	AC24V/DC12V	Max.:10.5VA/AC24V, 490mA/DC12V(IR-LED On)

2DNR 3-Axis Gimbal
Vari-focal Vandal Resistant Dome Camera

ML11052V6400A

MADE IN KOREA