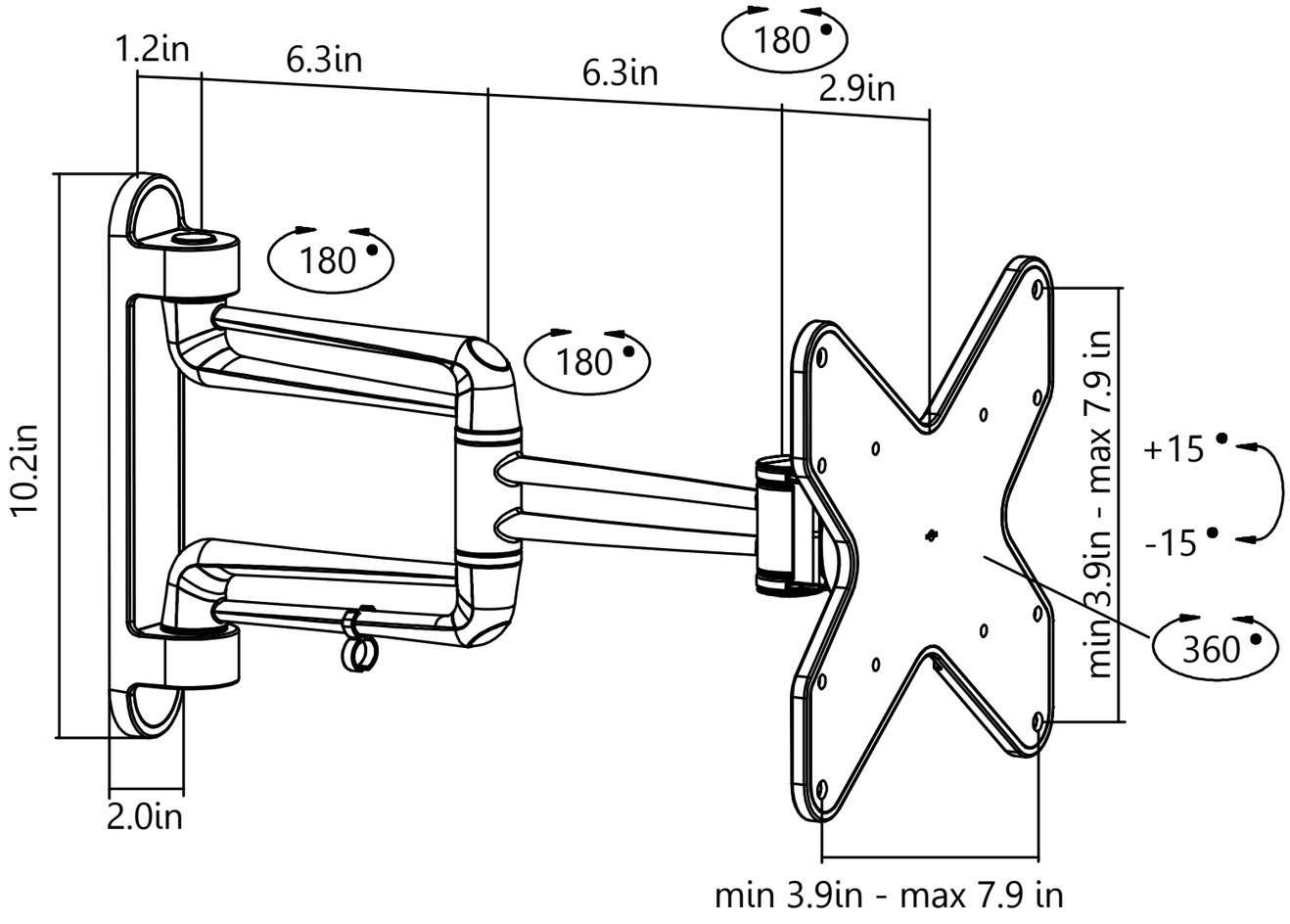
1.2in
6.3in
6.3in
180
2.9in
180
180
10.2in
2.0in
+15
-15
360
min 3.9in - max 7.9 in
min 3.9in - max 7.9 in

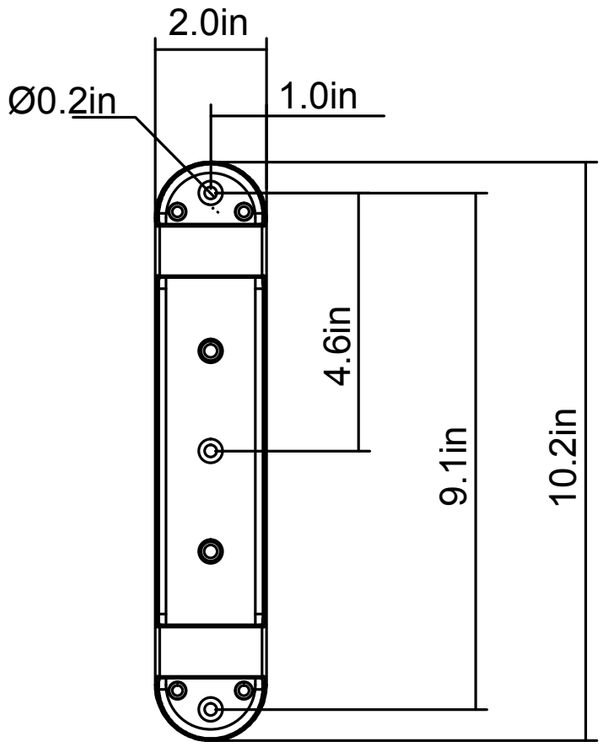
2.0in
Ø0.2in
1.0in
4.6in
9.1in
10.2in