RoHS COMPLIANT

REVISION INFORMATION			
Rev.	Rev. Date	Modified By	Brief Description

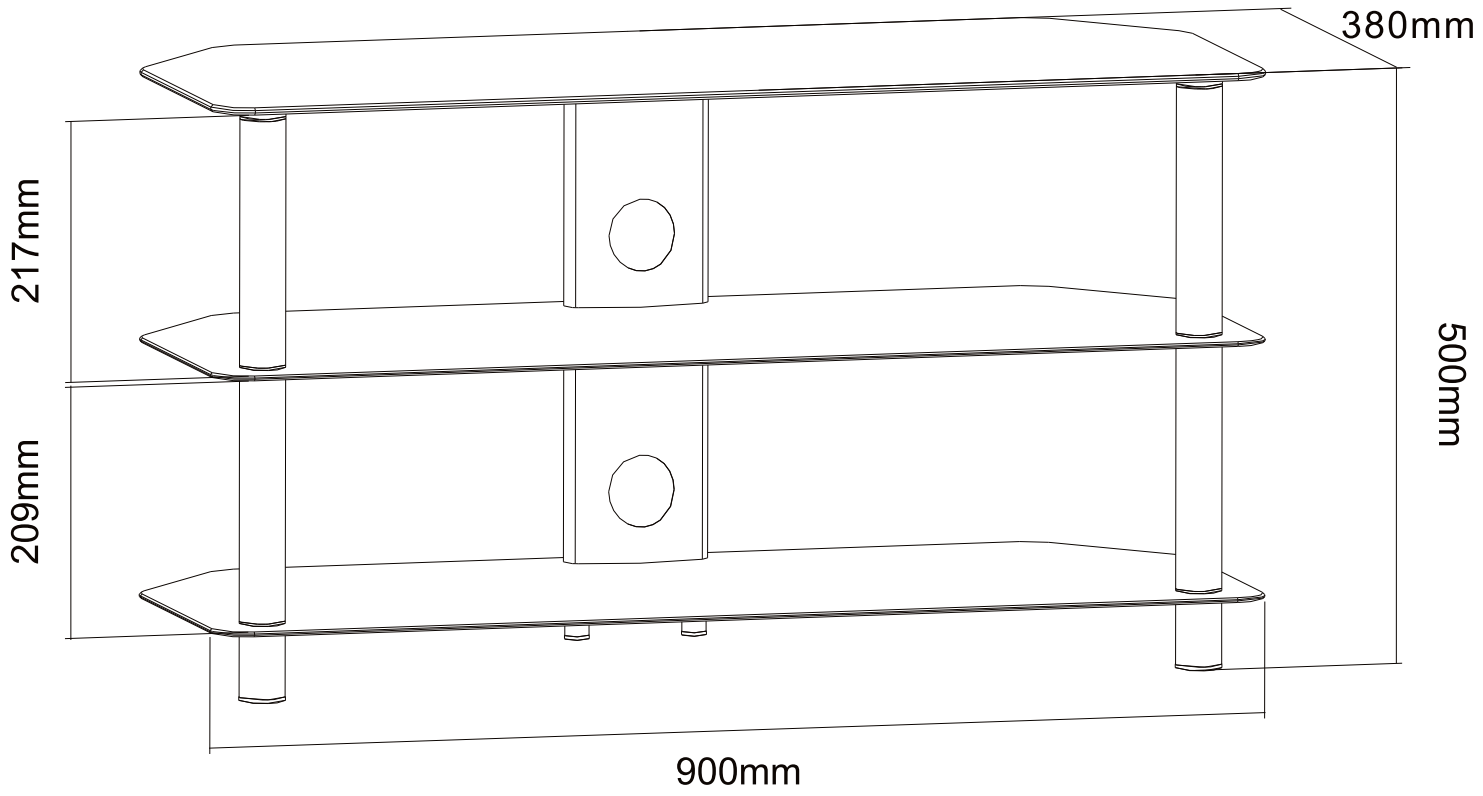

	(x4)
	(x2)
	(x4)
	(x2)
	(x2)
	(x4)

• **All of materials satisfy the CA65, ROHS...**

NO.	PART NAME	SPECIFICATION DESCRIPTION	QT'Y	UNIT
③				
②				
①	10903	High Quality TV Stand for Flat Panel TVs Up to 42 Inches		

MONOPRICE

GENERAL TOLERANCE	
0-6	±0.05
6-18	±0.07
18-50	±0.10
50-120	±0.15

APPROVED BY & DATE :

CHECKED BY & DATE :

DESIGNED BY & DATE :

DESCRIPTION :
High Quality TV Stand for Flat Panel TVs
Up to 42 Inches

ITEM NO. : **10903**

DATE :	REV :	UNIT :	SHEET:	SCALE:
2017/01/10	A01	MM	1 OF 2	1 : 1