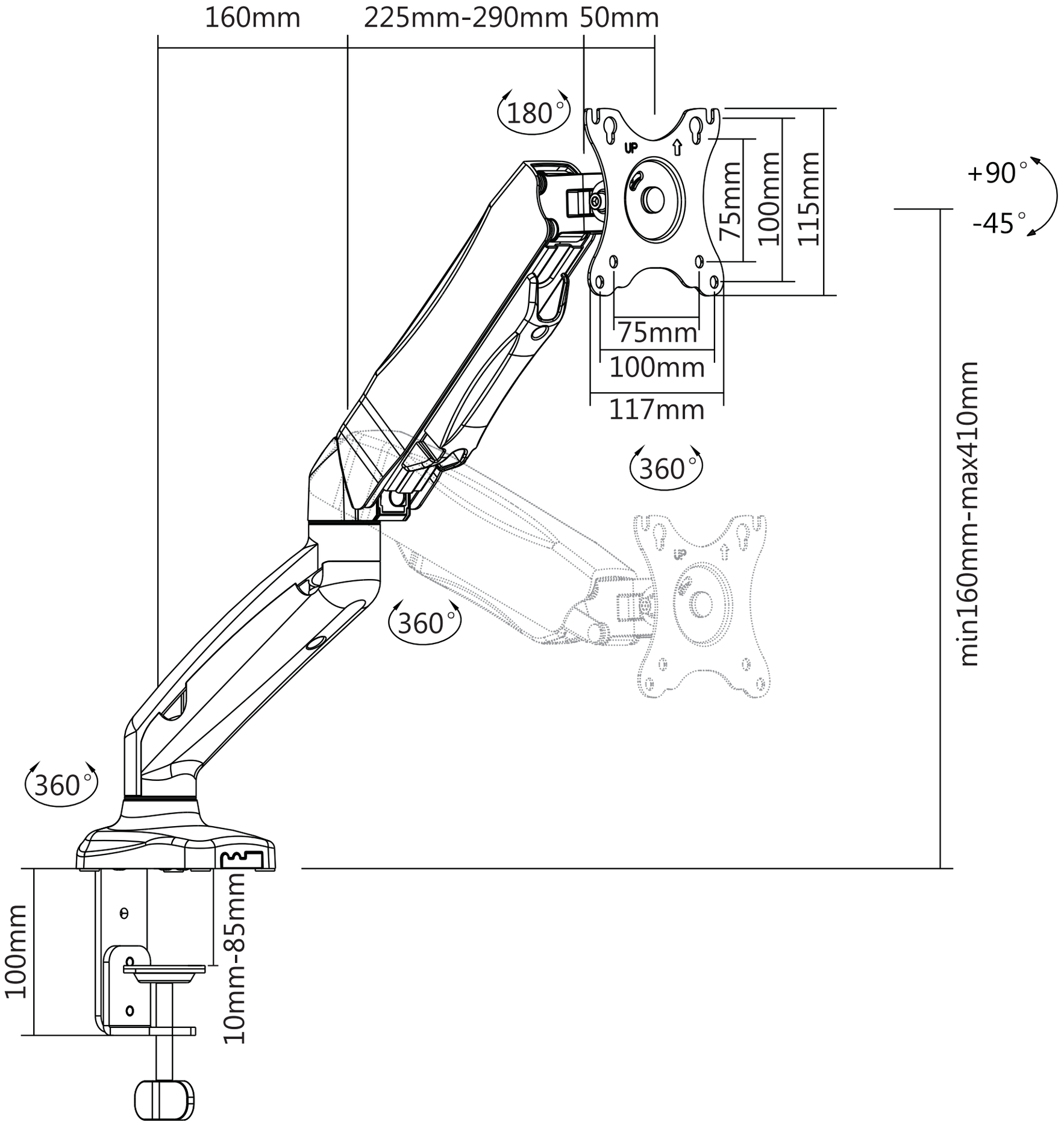
160mm
225mm-290mm
50mm
180°
UP
75mm
100mm
115mm
+90°
-45°
75mm
100mm
117mm
360°
360°
min160mm-max410mm
360°
100mm
10mm-85mm