RoHS COMPLIANT

REVISION INFORMATION		
Rev.	Rev. Date	Brief Description

Product Drawing

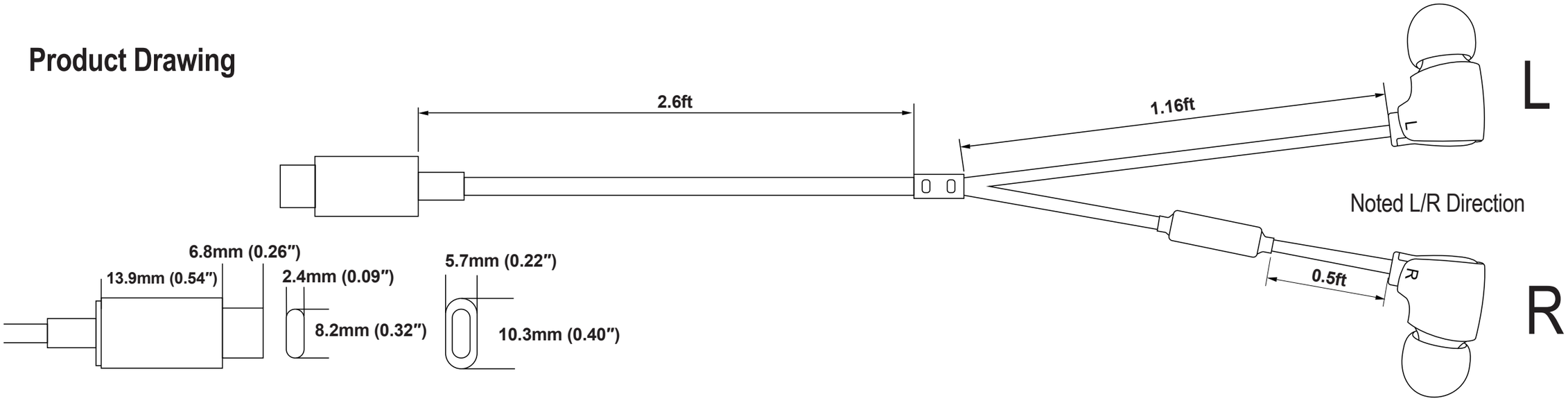

Wire Section diagram

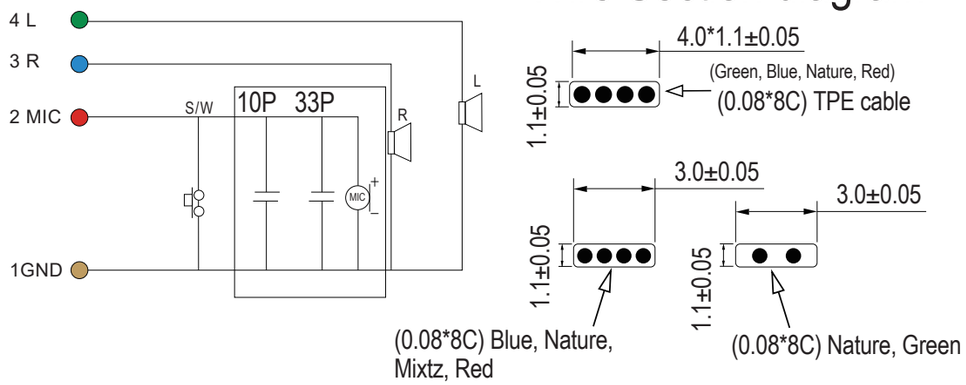

MONOPRICE

DESCRIPTION :
Monoprice Premium USB-C Wired Earbuds with Mic for Smartphones, Tablets, Laptops & Gaming

PID # : 47396

DATE :

UNIT : MM / IN

FILE NAME:

NO.	PART NAME	SPECIFICATION DESCRIPTION	QTY	UNIT
1	Materials	ABS+TPE+Metal		