**RoHS COMPLIANT**

| REVISION INFORMATION | | |
|---|---|---|
| Rev. | Rev. Date | Brief Description |
| V1 | 2024/10/31 | Initial Issue |

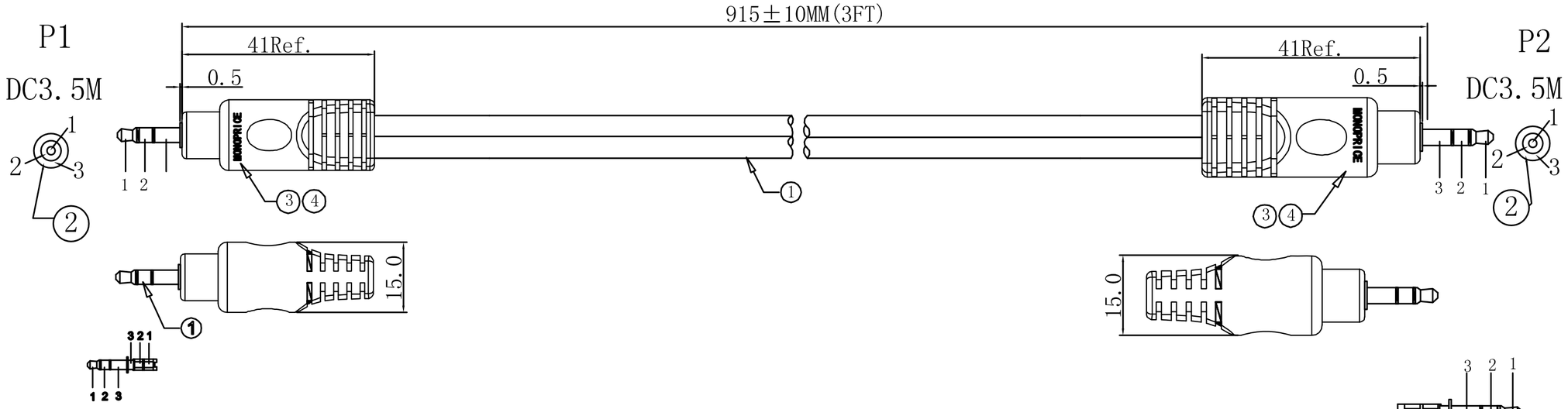


(1C*22#+S+COVERING)*2F 17/0.16TA S:34/0.10BA
BLACKJacketOD=6.15*6.15 MARKING: “MONOPRICE, Inc.”

PIN OUT:

| P1 | | P2 |
|---|---|---|
| 1 | WHITE | 1 |
| 2 | RED | 2 |
| 3 | DRAIN | 3 |

TEST REQUEST
1. 100% OPEN SHORT &MIS WIRE TEST
2. VOLTAGE:300V INSULATION
INSULATION RESISTANCE 10M Ohms MIN
CONTACT RESISTANCE 3 Ohms MAX

| NO. | PART NAME | SPECIFICATION DESCRIPTION | QTY | UNIT |
|---|---|---|---|---|
| 1 | OVER MODEL | PVC 459 BLACK | 1 | PCS |
| 2 | INSIDE-MODEL | PE NATURAL | 1 | PCS |
| 3 | CONN | DC 3.4 MALE INSULATOR BLACK GOLD PLATED Ø3.5 Ø6.0 | 1 | PCS |
| 4 | CABLE | (1C*22#+S+COVERING)*2F 17/0. 16TA S:34/0. 10BA<br>BLACK JACKET 0D=6.15 MARKING: "MONOPRICE, Inc." | 1 | PCS |
| | | | | |

MONOPRICE

DESCRIPTION
Monoprice 3ft Premium 3.5mm Stereo Male to 3.5mm Stereo Male 22AWG Cable (Gold Plated) - Black

PID 5576

| DATE | UNIT | FILE NAME |
|---|---|---|
| 2024/11/13 | MM | PID_PRODUCT |