RoHS COMPLIANT

REVISION INFORMATION			
Rev.	Rev. Date	Modified By	Brief Description

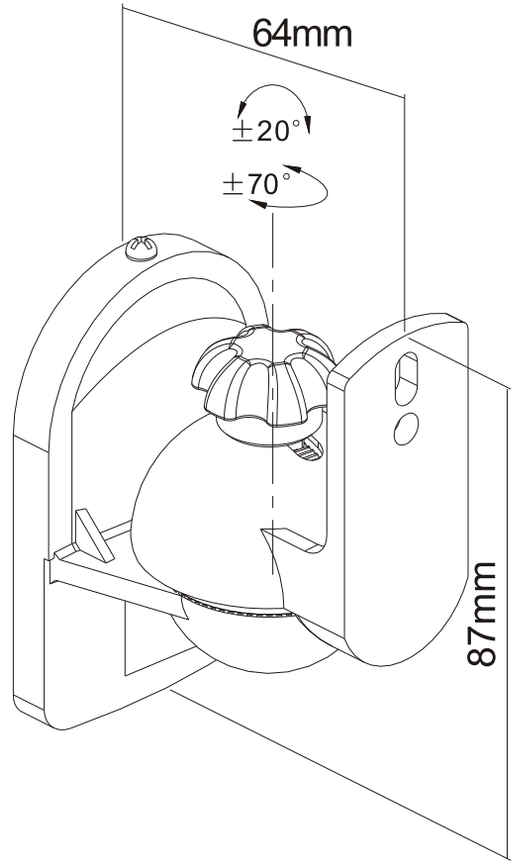

	M5x12 (x4)
	(x4)
	(x4)

- **All of materials satisfy the CA65, ROHS...**
- **UL certification required.**

NO.	PART NAME	SPECIFICATION DESCRIPTION	QT'Y	UNIT
③				
②				
①	6980	Speaker Wall Mounting Bracket - Silver (Max 7.7LBS) - Set of 2		

MONOPRICE

GENERAL TOLERANCE	
0-6	±0.05
6-18	±0.07
18-50	±0.10
50-120	±0.15

APPROVED BY & DATE :

CHECKED BY & DATE :

DESIGNED BY & DATE :

DESCRIPTION :
Speaker Wall Mounting Bracket - Silver \ (Max 7.7LBS) - Set of 2

ITEM NO. : **6980**

DATE :	REV :	UNIT :	SHEET:	SCALE:
2017/01/10	A01	MM	1 OF 2	1 : 1