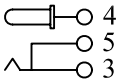

Circuit

DC-0003A

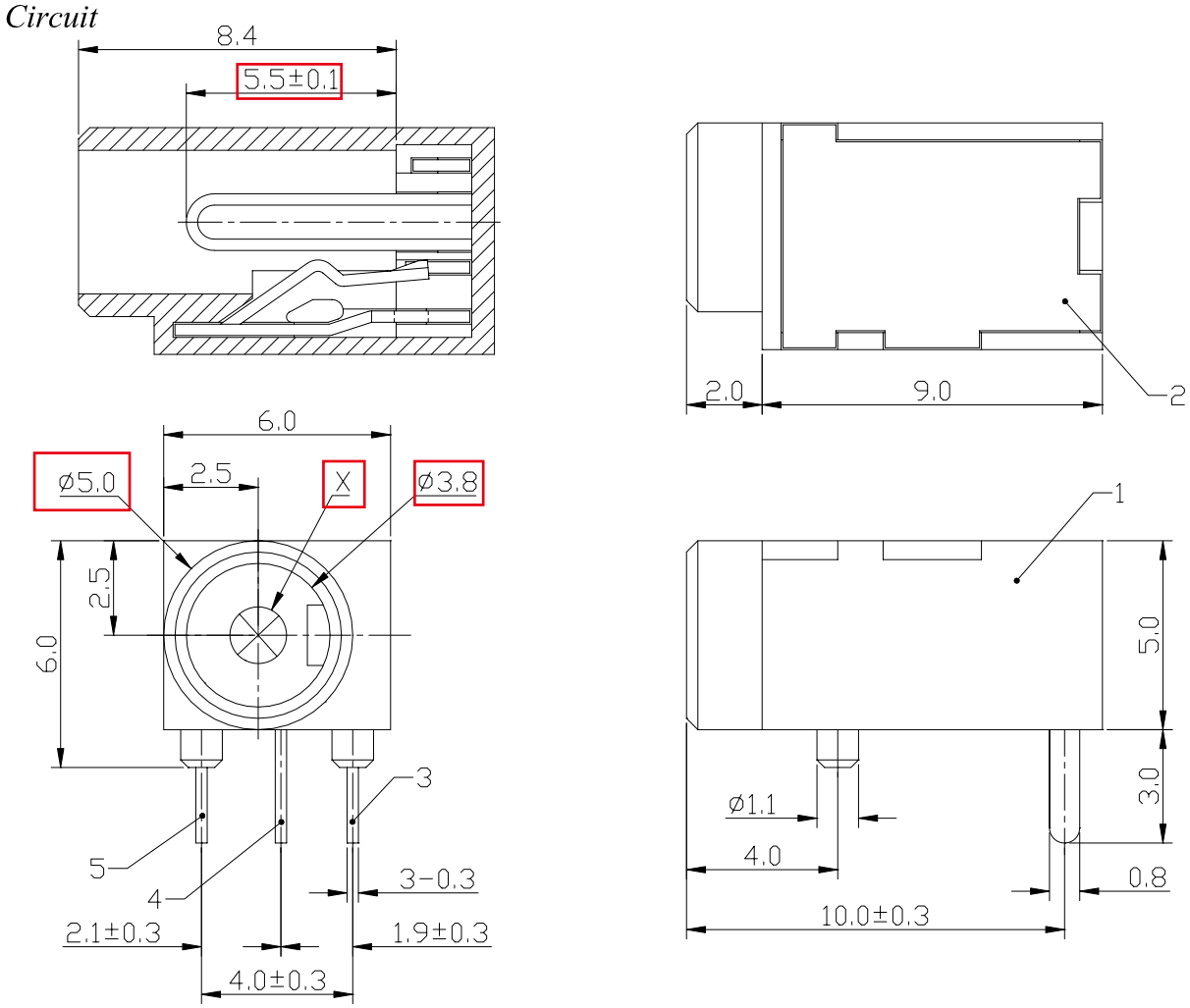

X	Ø1.0	Ø1.3
APPD		

NO	PART	MATERIAL	QTY	REMARKS
5	TERMINAL	BRASS STRIP	1	Ag PLATED
3	SPRING	SUS	1	NATURE
1	CASE	NYLON	1	BLACK

NO	PART	MATERIAL	QTY	REMARKS
4	TERMINAL	BRASS STRIP	1	Ag PLATED
2	COVER	NYLON	1	BLACK

SPECIFICATION:

Rating	DC 6V 0.5A
Insulation Resistance	100MΩ at 500V DC

Contact Resistance	100mΩ Max
Withstand Voltage	AC 250V For 1 minute
Life Test	≥5000 cycles

MONOPRICE®

DC JACK DC-0003A