RoHS COMPLIANT

REVISION INFORMATION			
Rev.	Rev. Date	Modified By	Brief Description

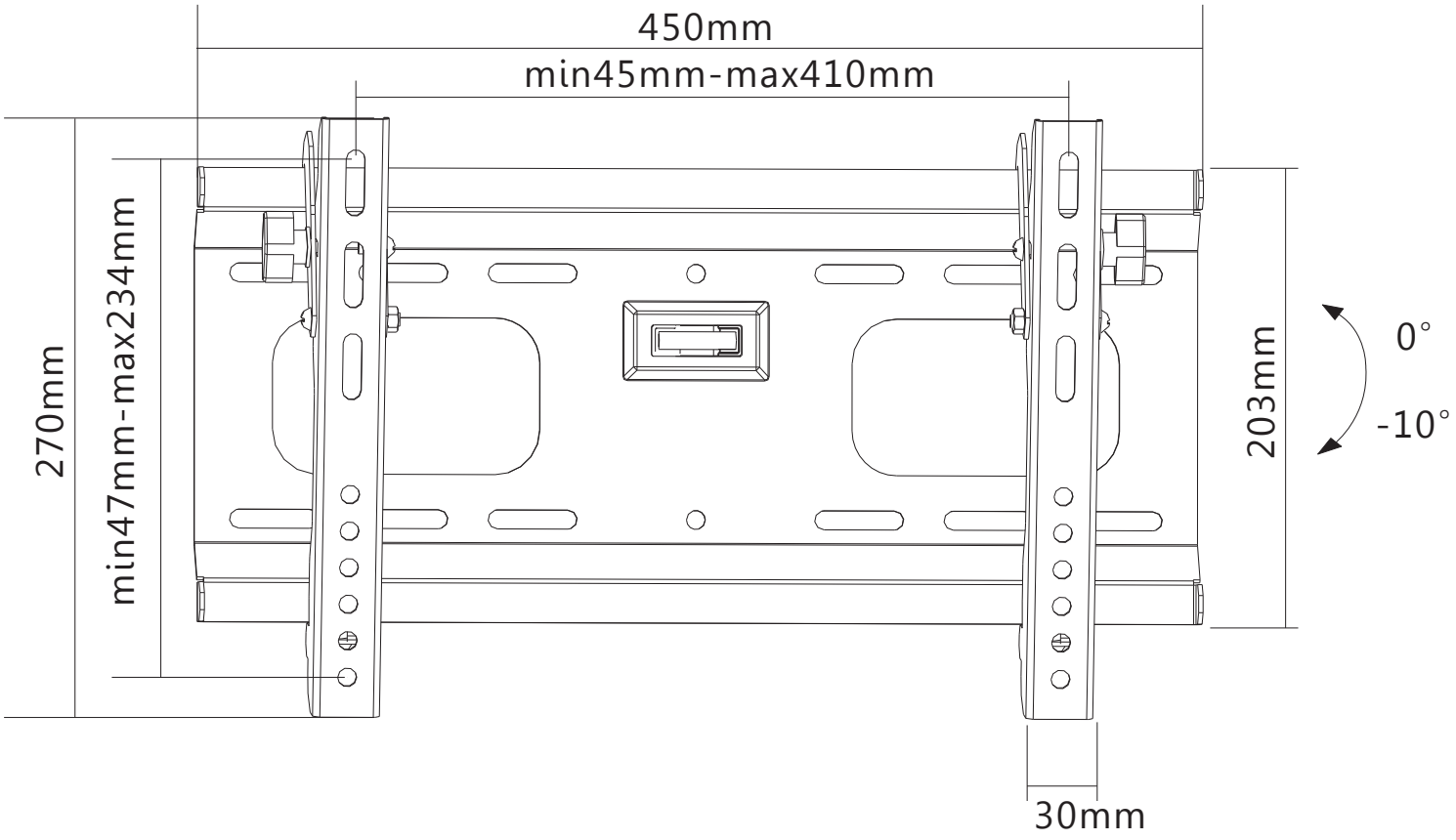

	M5x14 (x4)
	M6x14 (x4)
	M8x20 (x4)
	M6x30 (x4)
	M8x30 (x4)
	(x4)
	(x8)
	(x4)
	(x4)
	(x4)
	(x4)

- **All of materials satisfy the CA65, ROHS...**
- **UL certification required.**

NO.	PART NAME	SPECIFICATION DESCRIPTION	QT'Y	UNIT
③				
②				
①	9375	Ultra-Slim Tilt Wall Mount Bracket for LCD LED Plasma (Max 165Lbs, 32 - 55 inch) - BLACK - UL Certi		

MONOPRICE

GENERAL TOLERANCE	
0-6	±0.05
6-18	±0.07
18-50	±0.10
50-120	±0.15

APPROVED BY & DATE :

CHECKED BY & DATE :

DESIGNED BY & DATE :

DESCRIPTION :
Ultra-Slim Tilt Wall Mount Bracket for LCD LED Plasma (Max 165Lbs, 32 - 55 inch) - BLACK - UL Certi

ITEM NO. : **5915**

DATE :	REV :	UNIT :	SHEET:	SCALE:
2017/01/10	A01	MM	1 OF 2	1 : 1