RoHS COMPLIANT

| REVISION INFORMATION | | | |
|---|---|---|---|
| Rev. | Rev. Date | Modified By | Brief Description |
| | | | |

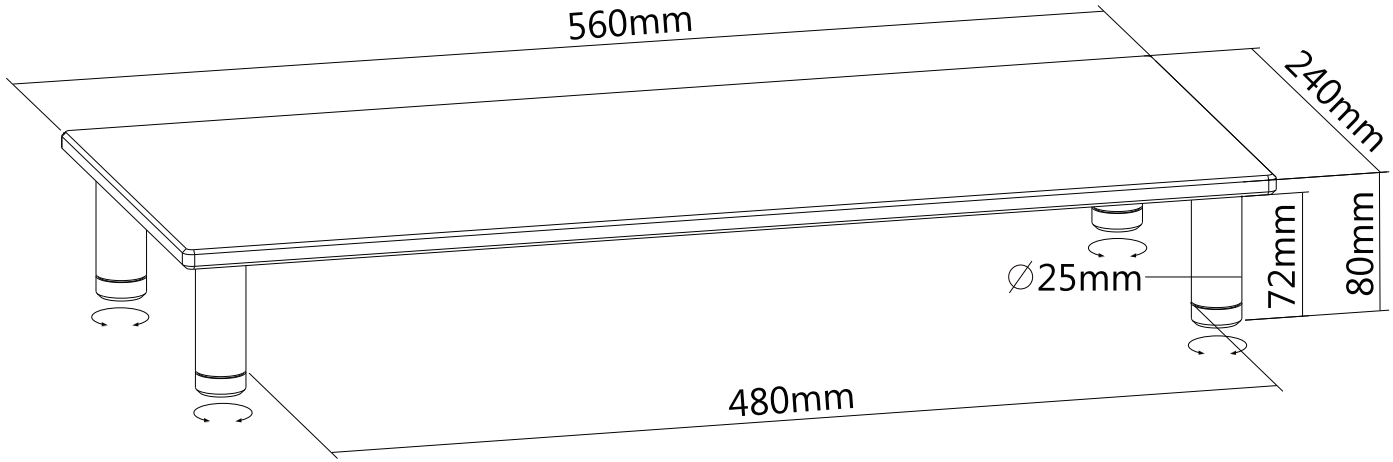


| | |
|---|---|
| | (x4) |
| | (x4) |
| | |
| | |
| | |
| | |
| | |
| | |
| | |
| | |
| | |
| | |
| | |
| | |
| | |
| | |

• **All of materials satisfy the CA65, ROHS...**

| NO. | PART NAME | SPECIFICATION DESCRIPTION | QT'Y | UNIT |
|---|---|---|---|---|
| ③ | | | | |
| ② | | | | |
| ① | 9434 | Multi Media Desktop Stand 22" x 9.5" | | |

MONOPRICE

| GENERAL TOLERANCE | |
|---|---|
| 0-6 | ±0.05 |
| 6-18 | ±0.07 |
| 18-50 | ±0.10 |
| 50-120 | ±0.15 |

APPROVED BY & DATE :

CHECKED BY & DATE :

DESIGNED BY & DATE :

DESCRIPTION :
Multi Media Desktop Stand 22" x 9.5"

ITEM NO. : **9434**

| DATE : | REV : | UNIT : | SHEET: | SCALE: |
|---|---|---|---|---|
| 2017/01/10 | A01 | MM | 1 OF 2 | 1 : 1 |