Full-motion **Wall Mount**

For Most 32˝~55˝ Displays, UL Certified

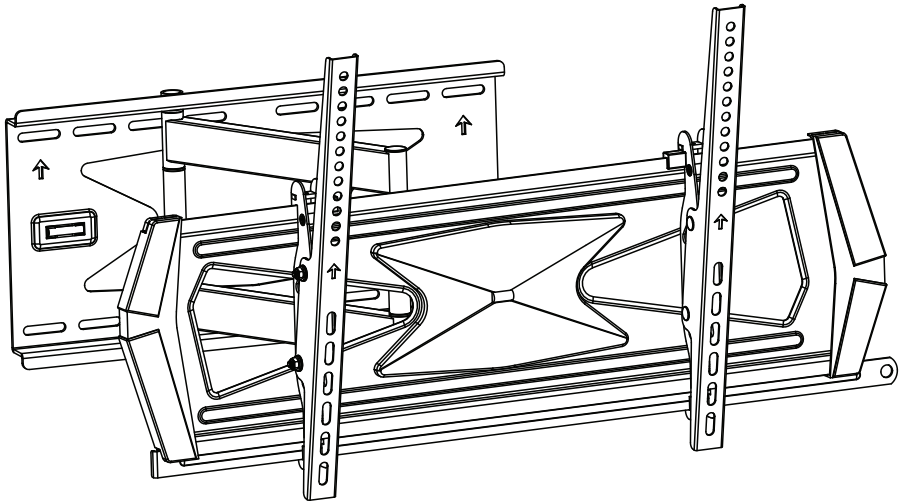

CAUTION: DO NOT EXCEED RATED LISTED WEIGHT. SERIOUS INJURY OR PROPERTY DAMAGE MAY OCCUR!

User's Manual
PID **12993**

300x300, 400x200, 400x400, 600x400, 800x400

70˝ MAX

88lbs (40kg) RATED

Revised: May 2015

NOTE: Read the entire instruction manual before you start installation and assembly.

SAFETY WARNINGS AND GUIDELINES

Please read this entire manual before you start installation and assembly of this wall mount. If you have any questions or concerns, please contact your installer.

- Upon receiving the wall mount, perform an inventory of all parts included in the package. If anything is missing or damaged, please contact your installer.
- Do not use with products that are heavier than the rated weight of this wall mount. Doing so could cause a failure of the mount or its attachment to the wall, result in damage to your valuable equipment and/or personal injury.
- This wall mount is designed to mount to wood stud walls, solid concrete walls, or brick walls.
- This mount must be attached in accordance with the instructions contained in this manual. Improper installation could result in damage to your valuable equipment and/or personal injury.
- Ensure that the surface to which the mount is attached will safely hold the total combined weight of the display, mount, and any attached accessories.
- Use safety gear and the proper tools when installing this mount. This mount should only be installed by professionals.
- Use the mounting screws included in the package. DO NOT OVER TIGHTEN the screws.
- This product contains small parts that could be a choking hazard if swallowed. Keep away from small children.
- This product is intended for indoor use. Outdoor use could result in failure causing damage to your valuable equipment and/or personal injury.
- Inspect the wall mount and installation at regular intervals (at least every three months) to ensure that the installation is secure and safe to use. Tighten screws as necessary, but DO NOT OVER TIGHTEN.

Package Contents

IMPORTANT: Please take an inventory of the package contents to ensure you have all the items listed below. If anything is missing or damaged, please contact your installer for a replacement.

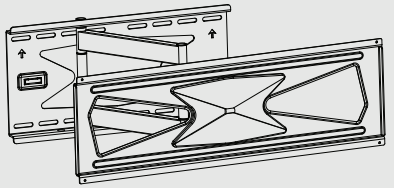

Wall mount (x1)
A

Safety bar (x1)
B

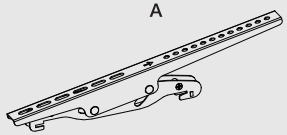

Left adapter bracket (x1)
C

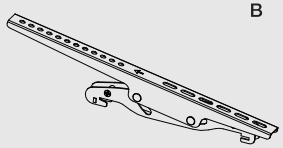

Right adapter bracket (x1)
D

Antiskid block (x2)
E

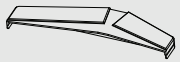

Decorative cover (x2)
F

ST2.9x6.5 (x4)
G

Package M

M5x14 (x4)
M-A

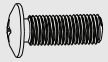

M6x14 (x4)
M-B

M8x20 (x4)
M-C

M6x30 (x4)
M-D

M8x30 (x4)
M-E

Washer (x4)
M-F

Small spacer (x8)
M-G

Big spacer (x4)
M-H

Package W

ST6.3x55 (x5)
W-A

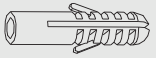

Concrete anchor (x5)
W-B

D6 washer (x5)
W-C

1. Installing the Decorative Covers

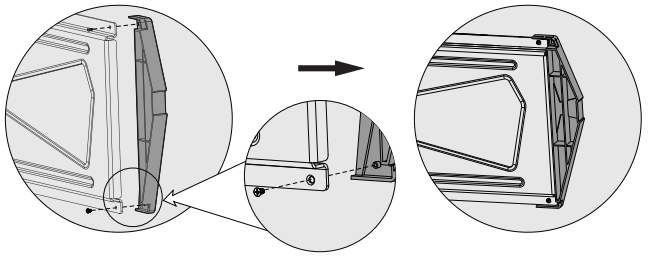

Attach the decorative covers to the wall plate using the screws.
Note: The gap on the decorative covers should face down.

2a. For Wood Stud Wall Mounting

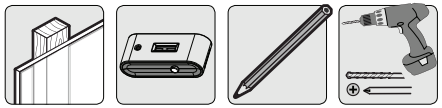

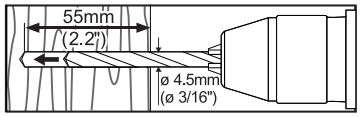

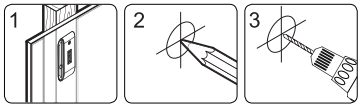

Find and mark the exact location of mounting holes

Drill pilot holes

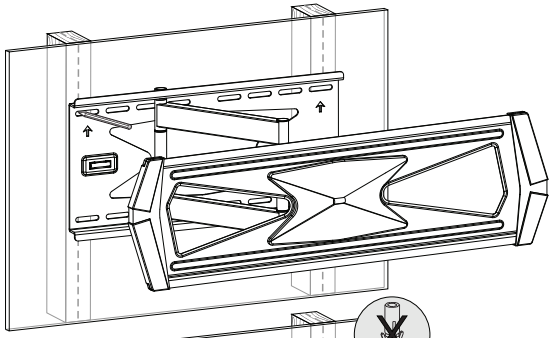

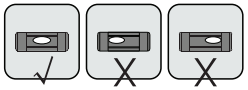

Screw the wall mount onto the wall

Install with the arrow pointing up.

⚠ WARNING

- Make sure that mounting screws are anchored into the center of the studs. The use of a stud finder is highly recommended.
- Installers are responsible to provide hardware for other types of mounting situations.
- Installers must verify that the supporting surface will safely support the combined weight of the equipment and all attached hardware and components.

2b. For Solid Brick and Concrete Mounting

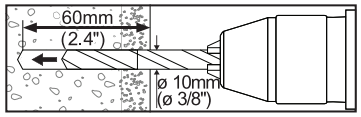

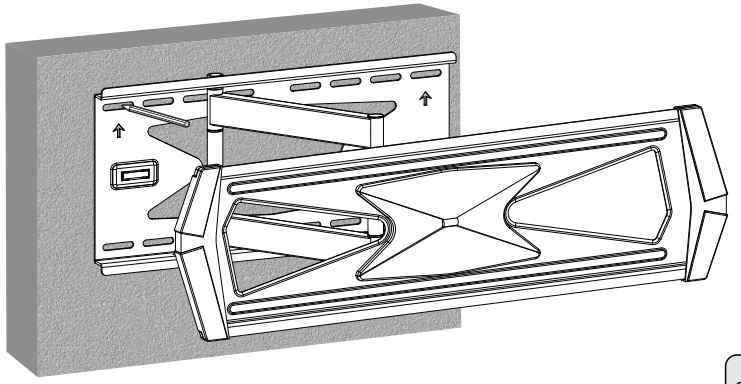

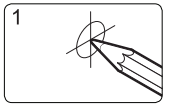

Mark the exact location of mounting holes

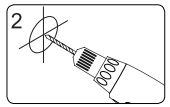

Drill pilot holes

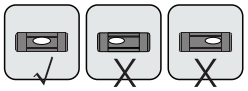

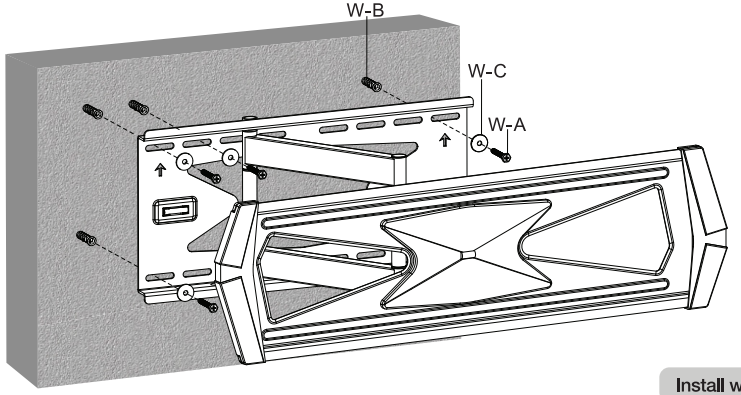

Screw the wall mount onto the wall

Install with the arrow pointing up.

⚠ WARNING

Installers must verify that the supporting surface will safely support the combined weight of the equipment and all attached hardware and components.

3. Installing the Adapter Brackets

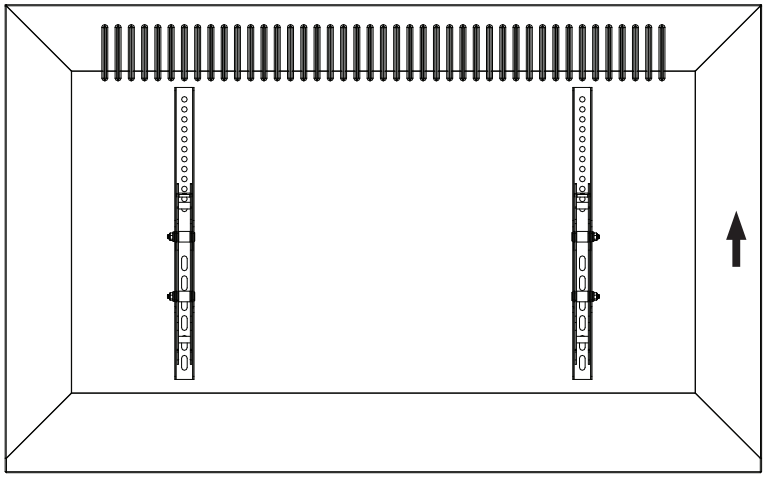

Top of the display.

3-1 For Flat Back Screens

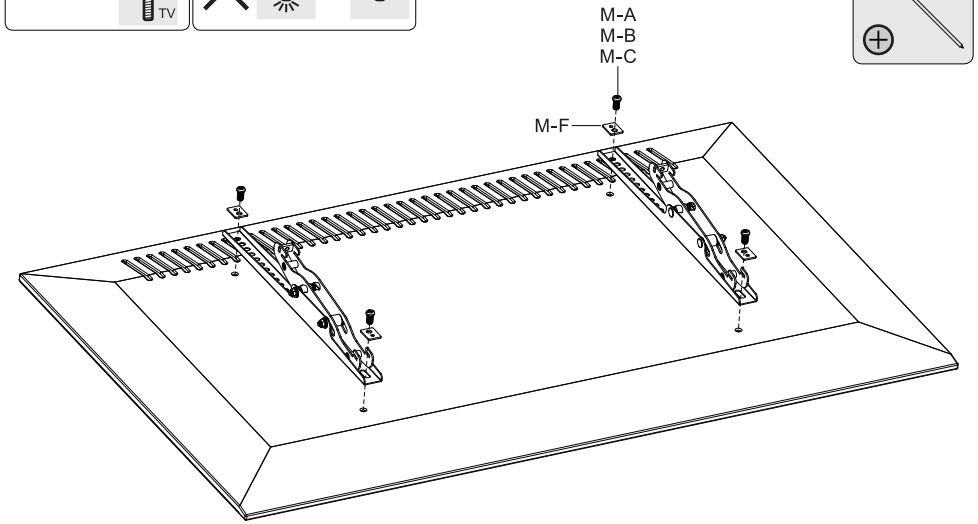

3-2 For Recessed Back Screens or to Access A/V Inputs

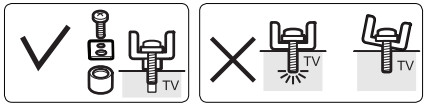

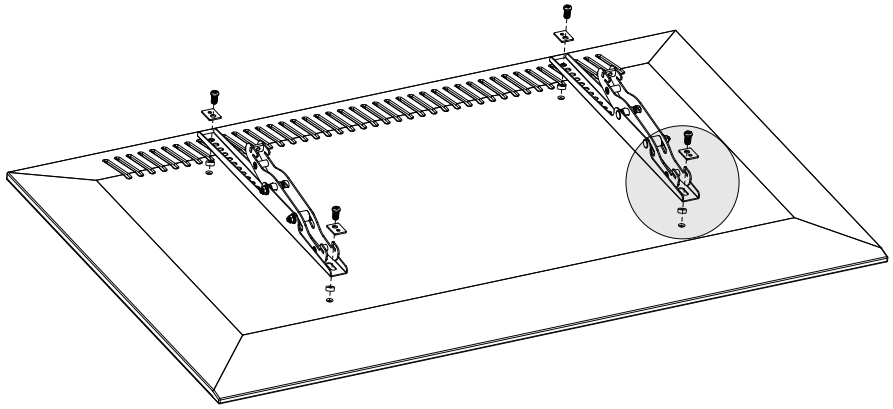

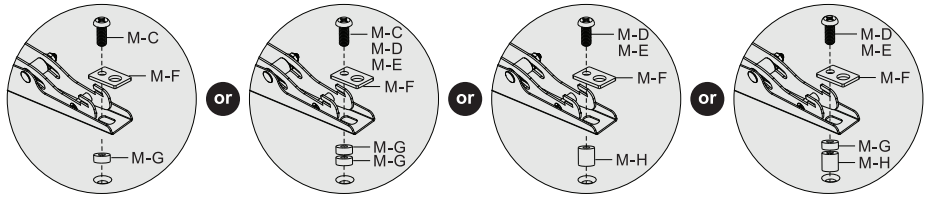

Note: Choose the appropriate screws, washers and spacers (if necessary) according to the type of screen.

- Position the adapter brackets as close as possible to the center of the display.
- Screw the adapter brackets onto the display.

Tighten all screws but do not over tighten.

4. Hooking the Display onto the Wall Mount

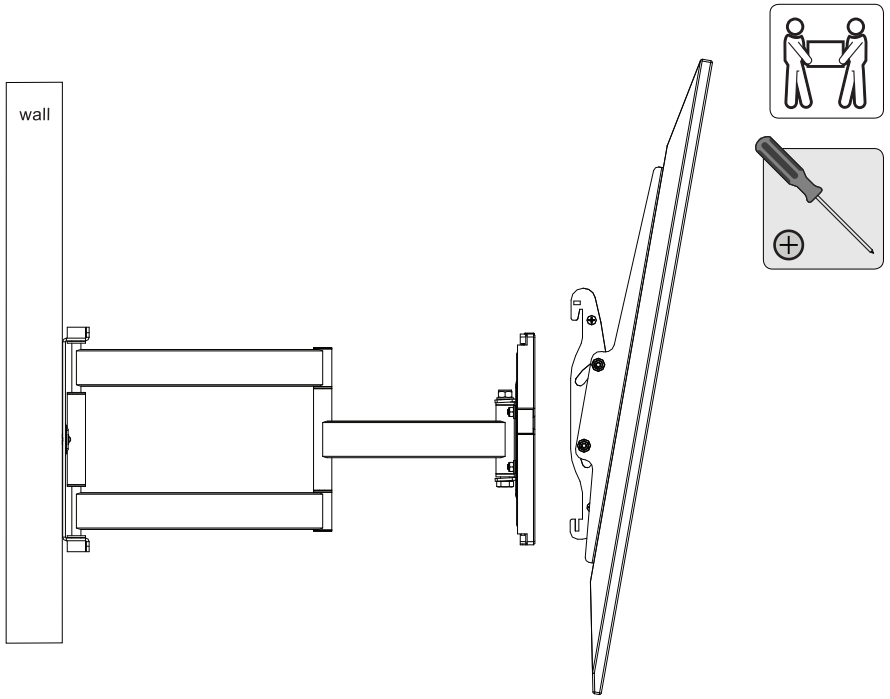

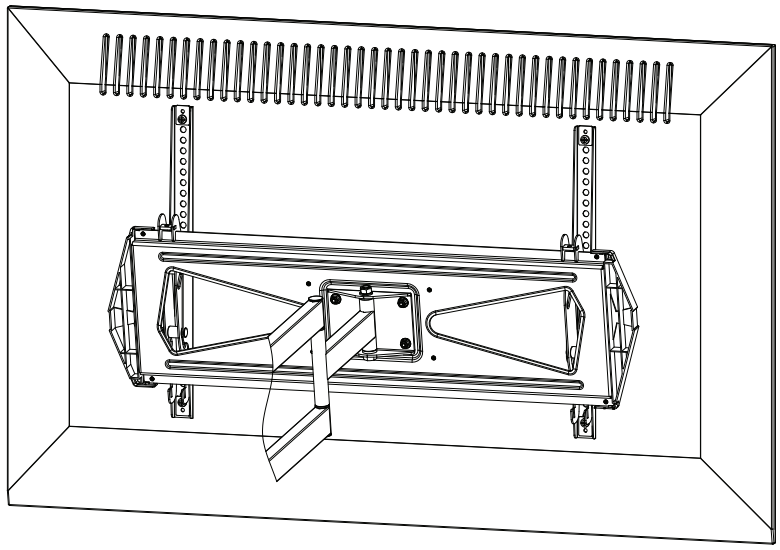

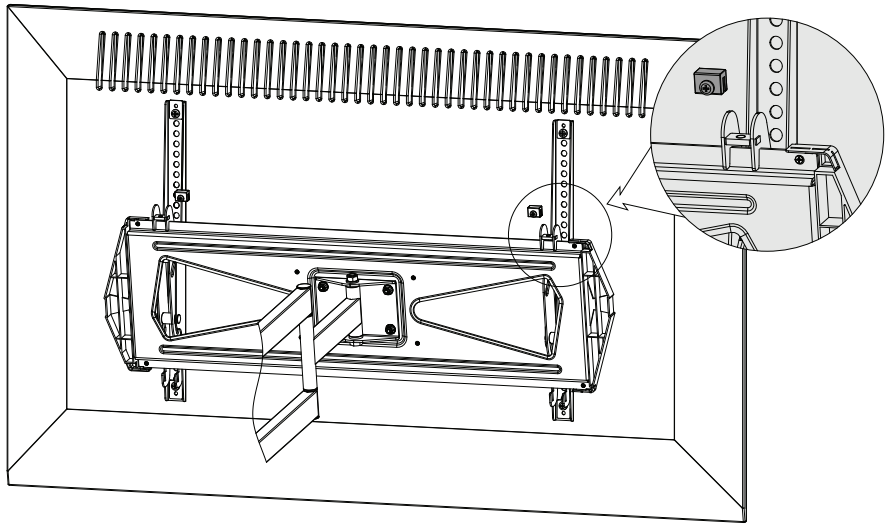

Install the two antiskid blocks as close to the adapter brackets as possible.

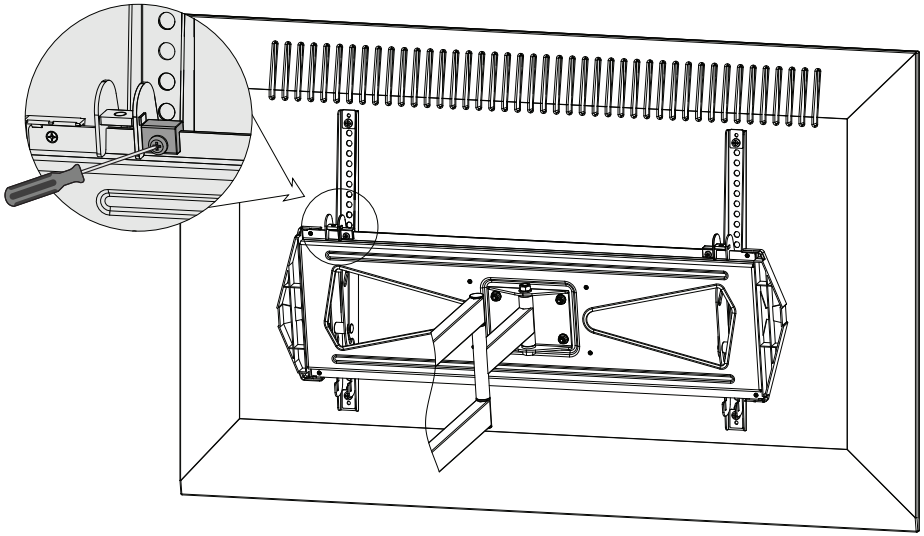

Tighten the screws on the antiskid blocks to prevent the display from moving.

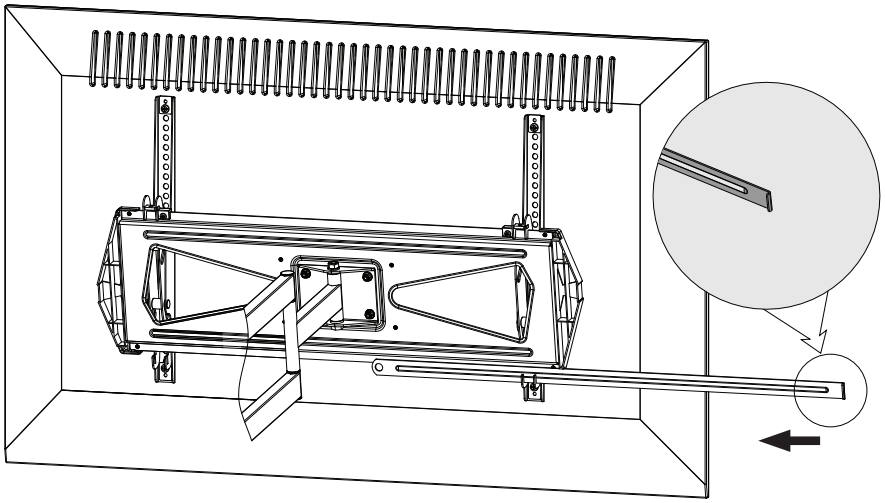

Insert the safety bar to secure the rails.

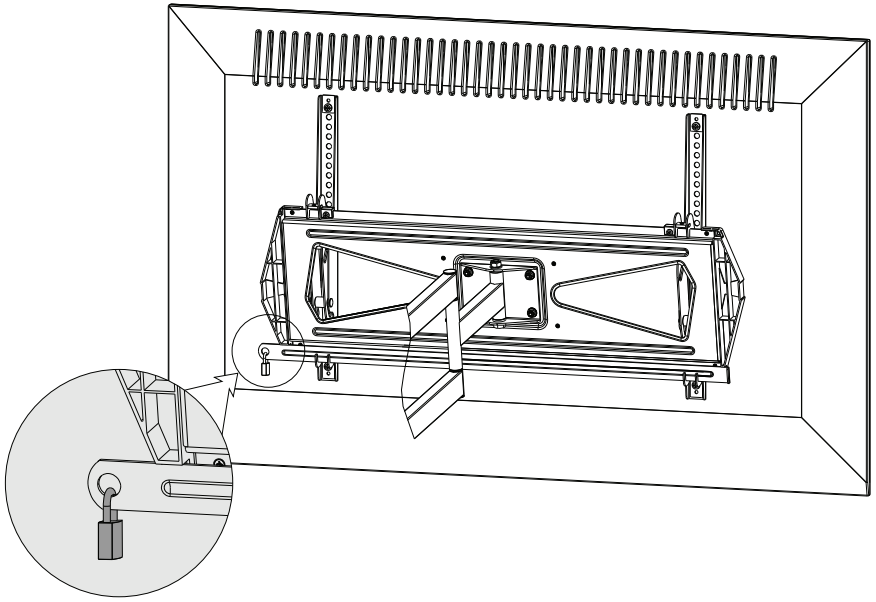

Use a padlock to prevent the display from being stolen. (Padlock is not included).

5. Adjustment

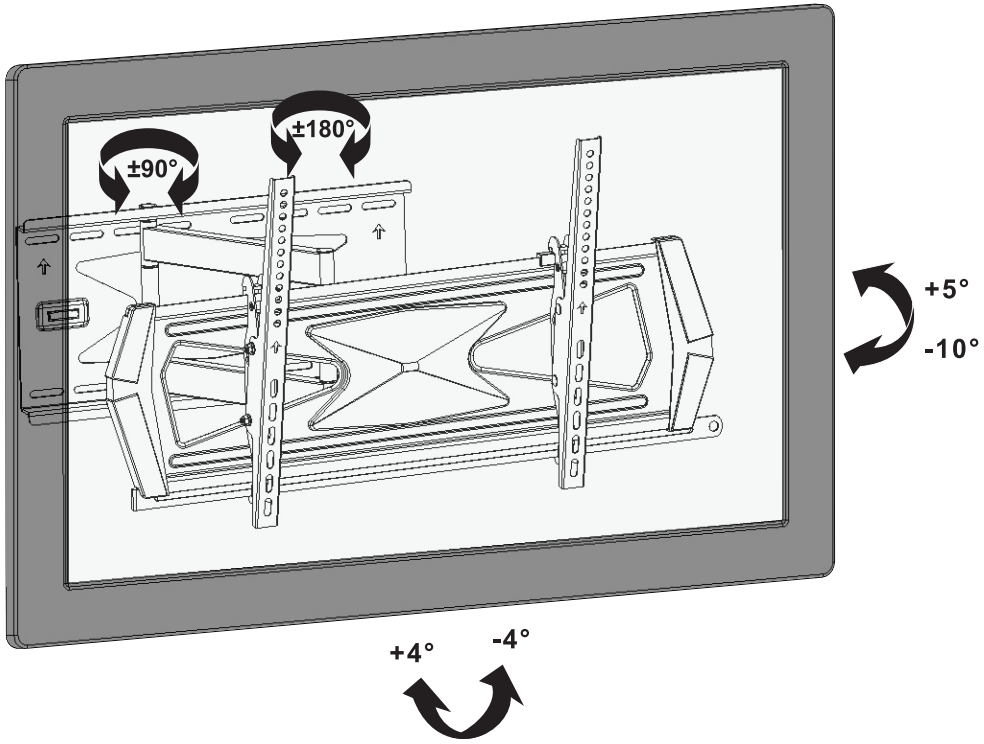

Adjust to the desired angle and/or tilt.

Maintenance
- Check that the bracket is secure and safe to use at regular intervals (at least every three months).
- Please contact your installer if you have any questions.