# 2-Port USB and HDMI® KVM Switch

P/N 38295

# Quick User Guide

## ONLINE SUPPORT

Monoprice is pleased to provide free online support. For order related issues, contact the Customer Service department through the Live Chat link on our website **www.monoprice.com** during normal business hours (Mon-Fri: 5am-7pm PT, Sat-Sun: 9am-6pm PT) or via email at **support@monoprice.com**

For technical issues, contact the Technical Support department through the online chat button on our website **www.monoprice.com** during regular business hours, 7 days a week. You can also get assistance through email by sending a message to **tech@monoprice.com**

## PACKAGE CONTENTS

Please take an inventory of the package contents to ensure you have all the items listed below. If anything is missing or damaged, please contact Monoprice Customer Service for a replacement.

- 1x 2-Port KVM Switch
- 2x Hotkey Stickers
- 1x User's Manual
- 1x Quick Start Guide

# PRODUCT OVERVIEW

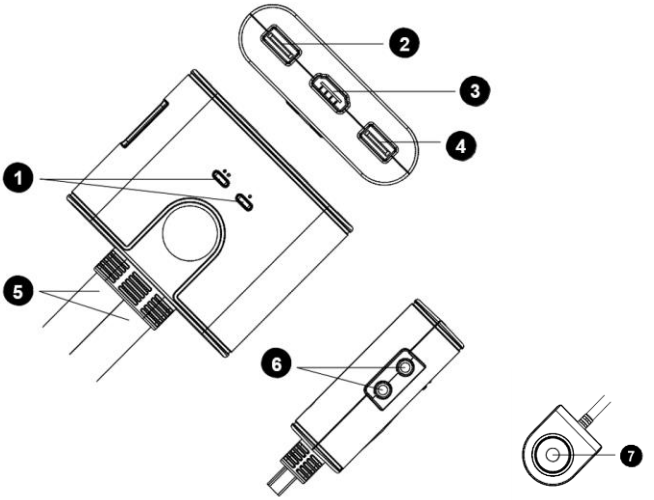


1. **Port LEDs:** Two LEDs to indicate the selected computer and its status. The LED illuminates solid when the corresponding computer is selected. The LED flashes when the corresponding computer is being scanned by the Auto Scan function. The LED is off when the corresponding computer is not selected.
2. **Console Keyboard Port:** Plug your USB keyboard into this port.
3. **Console Monitor Port:** Plug your HDMI® display into this port.
4. **Console Mouse Port:** Plug your USB mouse into this port.
5. **KVM Cables:** Two sets of USB, HDMI, and audio cables for connecting the two computers.
6. **Console Audio Ports:** 3.5mm jacks for connecting a microphone and headphones/speakers. Note that if your HDMI display has speakers, you do not need to connect headphones/speakers, unless you want to use the separate KVM and audio focus feature.

7. **Remote Port Selector:** Momentarily press the button to switch computer selection. Press and hold the button for 3 seconds to swap the default Hotkey Prefix between **Scroll Lock** and **Ctrl**.

## INSTALLATION

Perform the following steps to install this KVM switch.

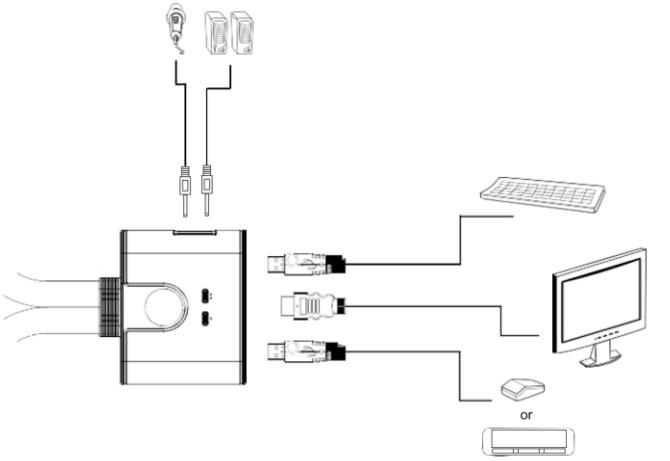


1. Ensure that all equipment to be connected is powered off and unplugged from its power source. This is especially true for computers that have the **Keyboard Power On** feature.
2. Plug your USB keyboard into the **Console Keyboard Port** on the switch.
3. Plug your HDMI® display into the **Console Monitor Port** on the switch.
4. Plug your USB mouse or graphics tablet into the **Console Mouse Port** on the switch.

5. (Optional) Plug a microphone into the 3.5mm **Console Audio Port** with the pink plastic ring.
6. (Optional) Plug a pair of headphones or powered speakers into the 3.5mm **Console Audio Port** with the green plastic ring. Note that if your HDMI display has speakers, you do not need to use external headphones/speakers, unless you want to use the separate KVM and audio focus feature.

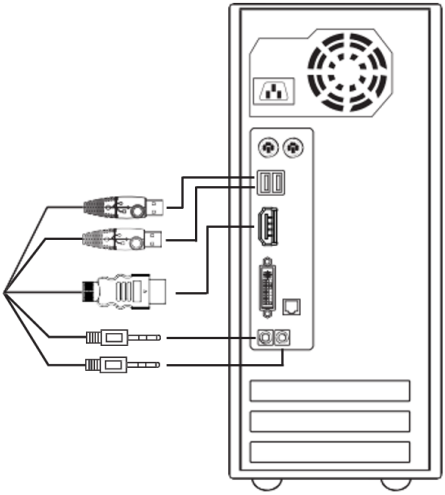

7. Plug the two USB, one HDMI®, and two audio cables on one of the **KVM Cables** into the appropriate ports on the first computer.
8. Repeat step 7 for the second **KVM Cable** and second computer.
9. Plug in and power on both computers. By default, the switch will select the first computer that is powered on.

Note: The USB ports are standard USB 2.0 ports and can accept any USB peripheral. If you want to use additional peripherals, plug a USB hub into one of the two USB ports, then plug the keyboard, mouse, and additional peripheral(s) into the hub.

# OPERATION

This KVM switch supports three different methods of switching the selected computer, which are detailed in the following sections.

**Important Note:** Do not switch focus when a USB peripheral, other than the keyboard and mouse, is in active operation. Doing so could result in data loss and/or file corruption.

## Manual Switching

Momentarily press the button on the **Remote Port Selector** to manually switch the KVM and audio focus from one computer to the other.

## Mouse Switching

Double-click the mouse wheel button to swap the KVM and audio focus from one computer to the other.

Notes:

1. This method is only supported by USB 3-button mice with a scroll wheel.
2. The function is not available by default. It must be enabled by first enabling **Mouse Emulation** with the hotkey command ([m] [Enter]), then turning on the **Scroll Wheel Switching** function ([w] [Enter]).

## Hotkey Switching

The hotkey method of switching offers the most flexibility in that you can independently switch the KVM and audio focus. All hotkey commands are prefaced with the **Hotkey Prefix**, which by default is two presses of the **[Scroll Lock]** key. To swap the KVM and audio focus from one computer to the other, type:

**[Scroll Lock] [Scroll Lock] [Enter]**

# HOTKEY SUMMARY

In order to function, hotkeys in the following table must be prefaced with the **Hotkey Prefix**. By default the **Hotkey Prefix** is:

**[Scroll Lock] [Scroll Lock]**

By pressing and holding the **Remote Port Selector** for 3 seconds, you can swap the **Hotkey Prefix** between the default and the following:

**[Ctrl] [Ctrl]**

Note that the following key names in the **Hotkey Combination** column are enclosed in brackets. The brackets should not be typed.

| Hotkey Combination | Function |
|---|---|
| [Enter] | Toggles the KVM and Audio focus between the two computers. Note that if the KVM and Audio focus are on different computers, only the KVM focus switches. |
| [k] [Enter] | Toggles the KVM focus only. |
| [s] [Enter] | Toggles the Audio focus only. Note that this function requires the use of external headphones/speaker. |
| [a] [Enter] | Starts Auto Scan. The KVM focus cycles from computer to computer at the default 5 second scan interval. To exit Auto Scan, press [Esc] or [Spacebar]. |
| [a] [Enter] [n] | Starts Auto Scan. The KVM focus cycles from computer to computer an **n** second intervals. Replace **n** with a number between 1-4, where 1=3 seconds, 2=5 seconds (default), 3=10 seconds, and 4=20 seconds. To exit Auto Scan, press [Esc] or [Spacebar]. |

| | |
|---|---|
| [x] [Enter] | Toggles the Hotkey Prefix key between [Scroll Lock] and [Ctrl]. |
| [m] [Enter] | Enables or disables the mouse emulation feature. |
| [n] [Enter] | Enables or disables keyboard emulation. |
| [w] [Enter] | Enables or disables the mouse scroll wheel switching function. |
| [F2] [Enter] | Activates Mac® keyboard mapping. |
| [F10] [Enter] | Automatically detects and sets the keyboard operating platform. |
| [F4] [Enter] | Lists the current switch settings. |
| [F5] [Enter] | Performs a USB keyboard and mouse reset. |
| [F6] [nn] [Enter] | Sets the keyboard language layout. Note than the [nn] is a two digit number that represents one of the following language codes: 33=US English, 08=French, and 15=Japanese. |
| [d] [Enter] | Invokes the Video DynaSync™ function, which eliminates boot-up display problems and optimizes the video resolution when switching ports. |
| [e] [Enter] | Enables or disables the Power On Detection feature, which automatically switches the focus if one computer is powered off. |
| [r] [Enter] | Resets all hotkeys to the default setting. |

Note: When Keyboard Emulation is disabled, the [m], [w], [F2], [F4], [F5], [F6], and [F10] hotkeys are disabled.

*HDMI®, the HDMI Logo, and High-Definition Multimedia Interface are trademarks or registered trademarks of HDMI Licensing LLC in the United States and other countries.*

*Apple® and Mac® are trademarks of Apple Inc., registered in the U.S. and other countries.*

*Video DynaSync™ is a trademark of ATEN International Co., Ltd.*