MONOPRICE

Monoprice SlimSelect Series Full-Motion Articulating TV Wall Mount for TVs 19 in to 55in, Max Weight 100 lbs, Extension Range from 1.2in to 18.1in, VESA Patterns up to 400x400

P/N 39304

Quick Install Guide

SAFETY WARNINGS AND GUIDELINES

Please read this entire manual before using this device, paying extra attention to these safety warnings and guidelines. Please keep this manual in a safe place for future reference.

- Do not exceed the rated weight limit. Doing so can cause the mount to fail, resulting in equipment damage and/or severe personal injury.
- Ensure that the structure to which this mount will be installed is capable of supporting at least four times the total weight of the mount and any connected displays.
- Use the supplied mounting screws. Tighten the screws using the appropriate tool, but take care not to over-tighten them.
- This device is intended for indoor use only.
- This device contains small parts that could pose a choking hazard to small children. Keep this device and its spare parts out of reach of children.
- Inspect the installation at least once every three months to ensure that it is secure and safe to use.
- Please take an inventory of the package contents to ensure you have all the items shown in the Parts List. If anything is missing or damaged, please contact Monoprice Customer Service for a replacement.

PARTS LIST

A		M4 x 25 (mm) - 4pcs
B		M5 x 25 (mm) - 4pcs
C		M6 x 25 (mm) - 4pcs
D		M8 x 25 (mm) - 4pcs
E		13 x 6.2 x 1.5 9 (mm) - 4pcs
F		17 x 8.2 x 12 (mm) - 4pcs
G		M10 - 1pc
H		7 x 80 - 4pcs
I		10 x 7 x 60 - 4pcs
J		M6 x 12 (mm) - 8pcs
K		M6 - 8pcs
L		Carpenter Level
M		8ft Premium HDMI Cable
N	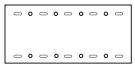	Cutout Template
O	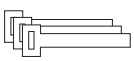	Hook & Loop Cable Ties

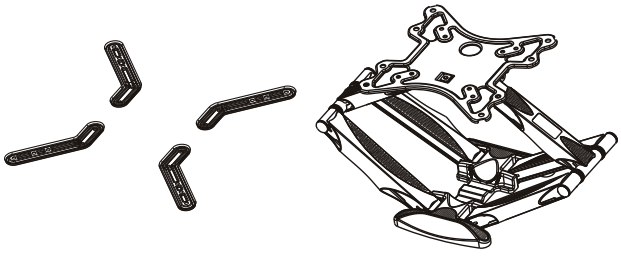

INSTALLATION

1

1a. Use the Cut-out Template (N) to drill holes.
1b. Insert anchors (I) and mount the base plate

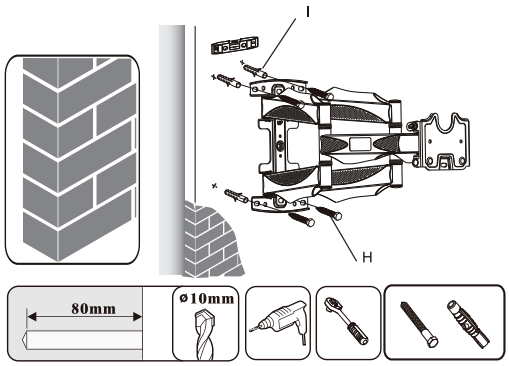

2

For TV's with VESA patterns 100x100mm and 200x200mm use the adapter faceplate.

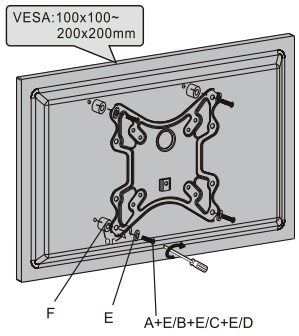

2b

For TV's with VESA patterns 400x200 mm to 400x400mm add the extenders before connecting the faceplate to the TV.

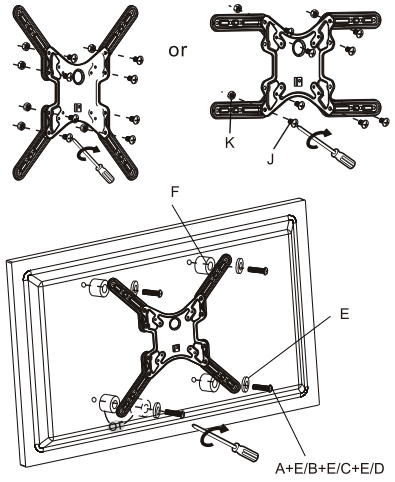

3

Install the Wall Plate Cover

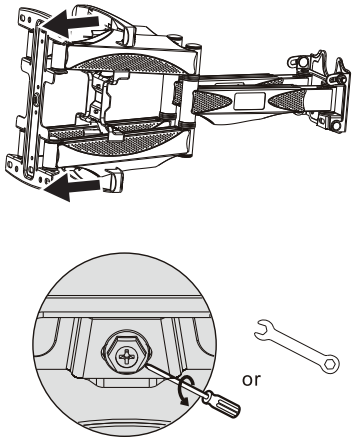

4

Attach the TV to the mount.

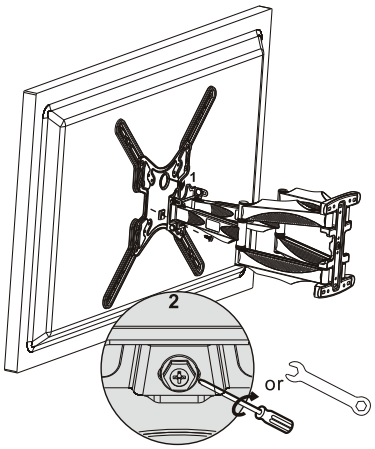

5

Tilt Angle Adjustment

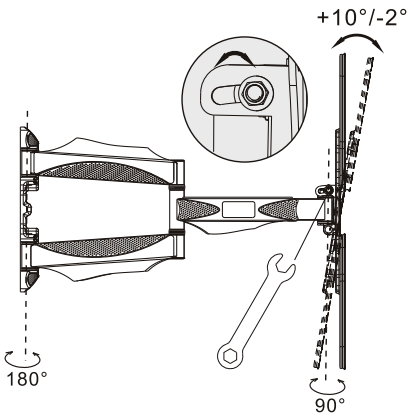

CUSTOMER SERVICE

The Monoprice Customer Service department is dedicated to ensuring that your ordering, purchasing, and delivery experience is second to none. If you have any problem with your order, please give us an opportunity to make it right. You can contact a Monoprice Customer Service representative through the Live Chat link on our website **www.monoprice.com** or via email at **support@monoprice.com**. Check the website for support times and links.