Manual Instruction

VESA200x200/200x400/400x400mm

45kg/99lbs

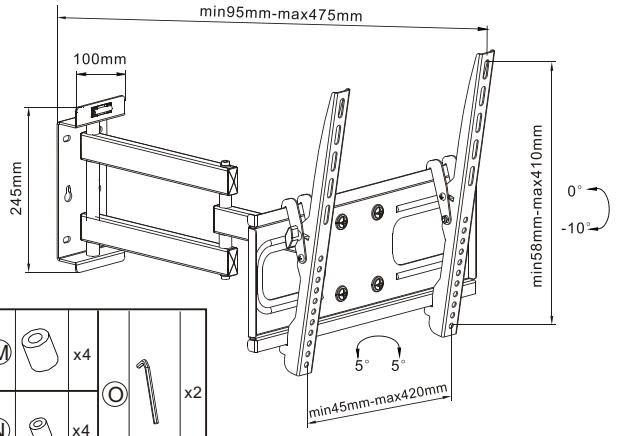

A	M8x90	x6	C	M8x25	x4	E	M6x30	x4	G	M5x30	x4	I	M4x30	x4	K	Ø8	x6	M		x4	O		x2
B	Ø12x56	x6	D	M8x40	x4	F	M6x12	x4	H	M5x12	x4	J	M4x12	x4	L		x4	N		x4			

1

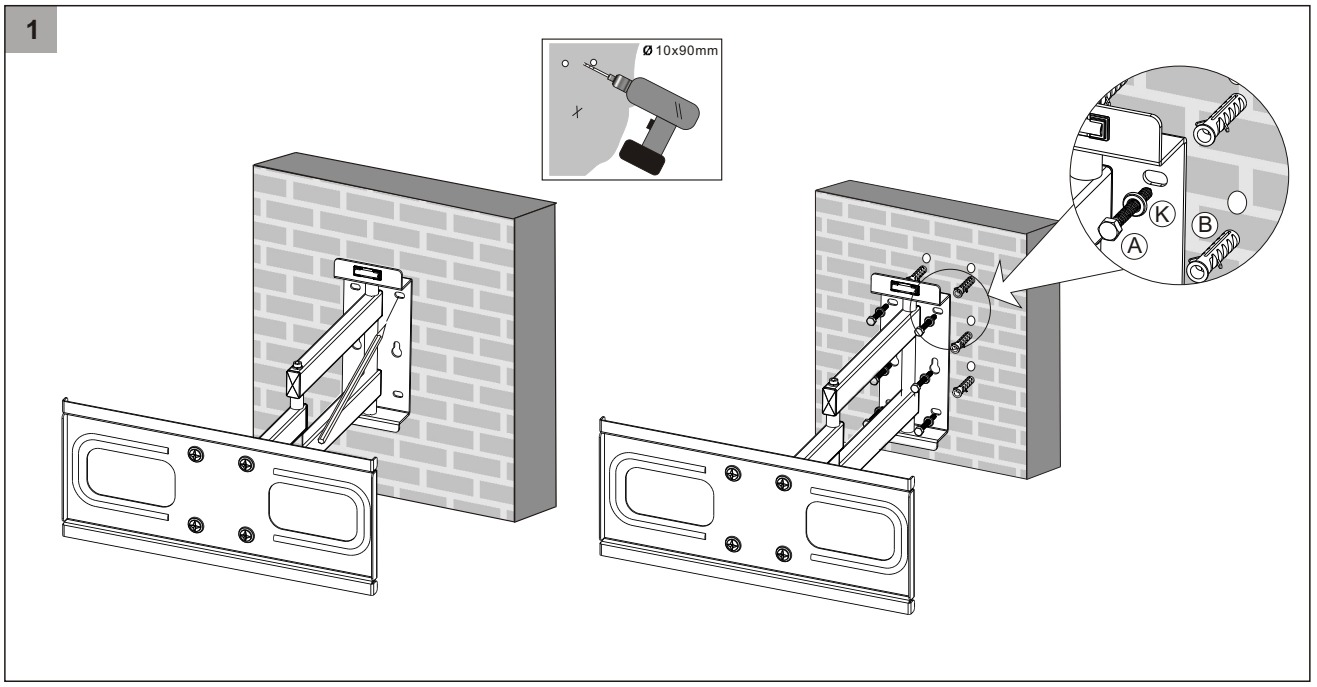

2

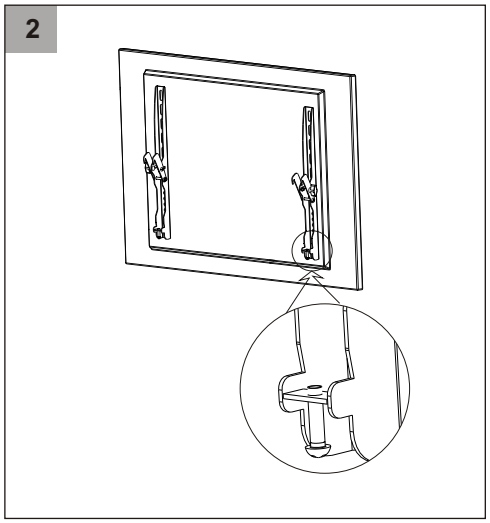

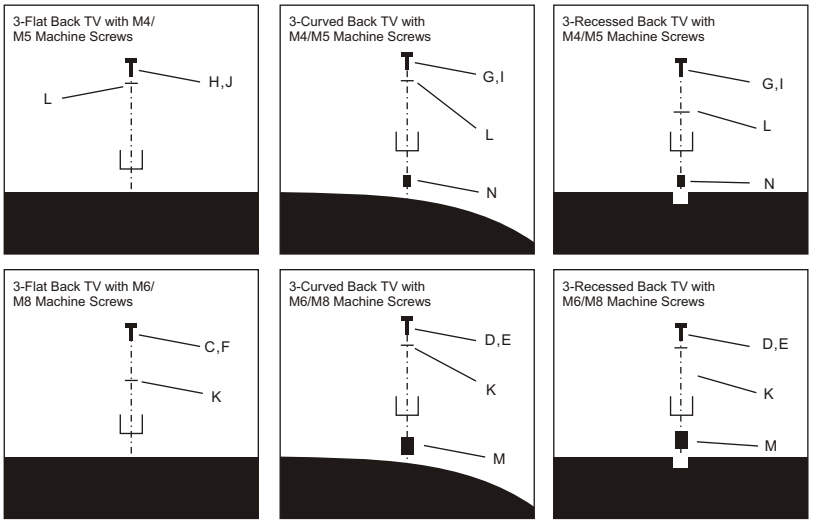

3

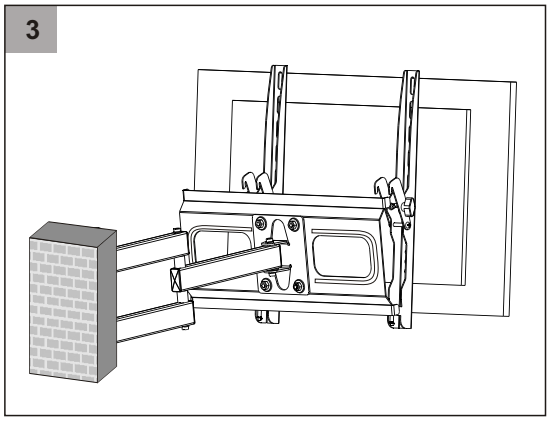
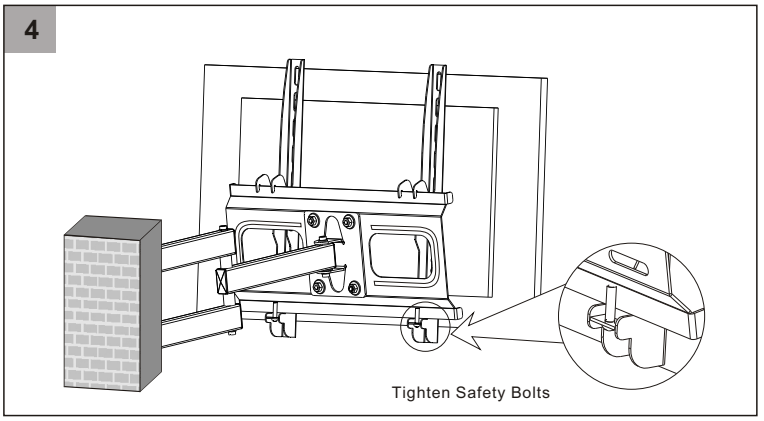
4