RoHS COMPLIANT

REVISION INFORMATION		
Rev.	Rev. Date	Brief Description
V1	2021.10.15	Initial Issue
V2.	2021.21.20	Revised Cable Marking
V3.	2023.09.21	Revise C14 connector marking

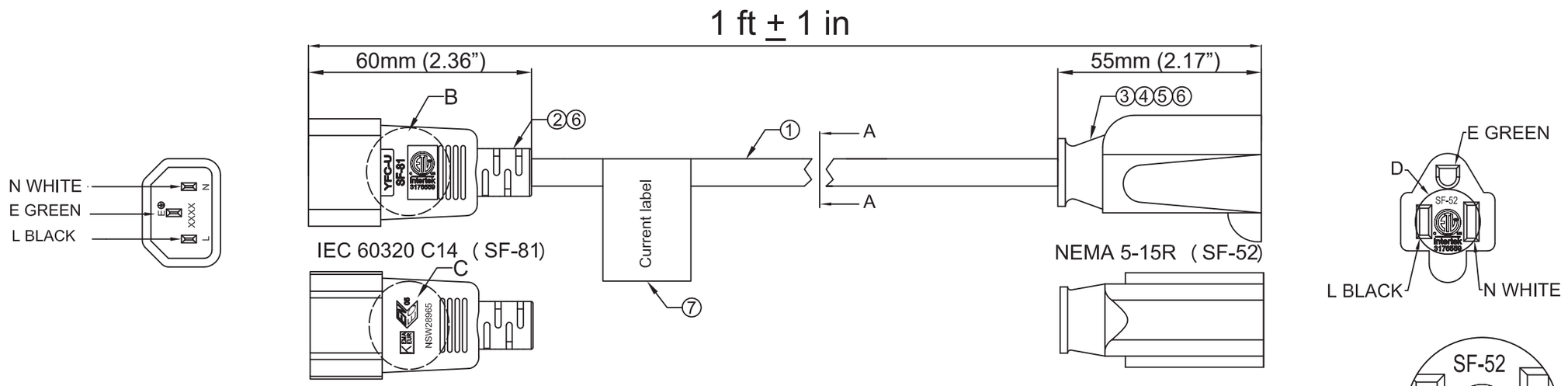

WIRE MARKING WX(NO.650):
(ETL)US 3176559 SVT 3x18AWG 105℃ 300V VW-1 C(ETL) SVT 3x0.824mm² (18AWG) FT2

WIRE MARKING PH(NO.836):
(ETL)US 5019033 SVT 3x18AWG 105℃ 300V VW-1 C(ETL) SVT 3x0.824mm2 (18AWG) FT2

File No. replaceable
WX(3176559)
PH(5019033)

D
2:1

File No. replaceable
WX(YFC-U 3176559)
PH(YFC-F 5019033)

B
1.5:1

C
1.5:1

Polarity and Continuity Test	
Dielectric Voltage Withstand Test :1500V /1 Sec	
Electrical Performance (20°C)	
Item	Parameter
Conductor resistance	≤ 22.84Ω/1000m
Voltage Rating	AC 300V

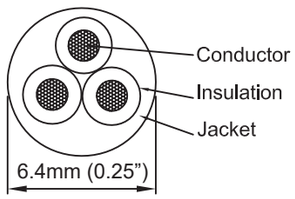

A=A Section

PID	Cable Color	Molding Color	SF-81 C14 Bracket Color	Length (FT)
1302	Black	Black	Black	1ft ± 1 in

Pinout		
IEC60320 C14 SF-81	Wire	NEMA 5-15R SF-52
E	GREEN	E
N	WHITE	N
L	BLACK	L

NO.	PART NAME	SPECIFICATION DESCRIPTION	QTY	UNIT
7	Current label	C (ETL) US General Use Cordset Indoor label 10A 125V	1	PC
6	Molding	PVC 40P	AR	G
5	Bracket	SF-52 Upper cover of inner frame 5-15R Three plug Black	1	PC
4	Terminal	5-15R Male Three plug Grounding Straight insert of terminal brassy 18AWG	1	PC
3	Terminal	5-15R Male Three plug Current-carrying Straight insert of terminal brassy 18AWG	2	PCS
2	Terminal	C14 Terminal Brass Natural color and Bracket, With 18-14AWG	1	PC
1	Cable	SVT 18 AWGx3C 105 °C	1	PC

MONOPRICE

DESCRIPTION :
Monoprice™ Desktop Computer Power Cord - IEC 60320 C14 to NEMA 5-15R, 18AWG, 10A/1250W, SVT, 125V, Black, 1ft

PID # : 1302

DATE :

UNIT : ft / in

FILE NAME: