RoHS COMPLIANT

REVISION INFORMATION		
Rev.	Rev. Date	Brief Description

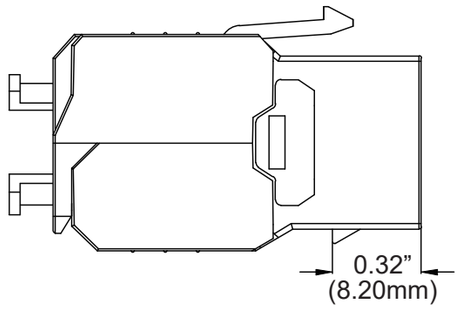

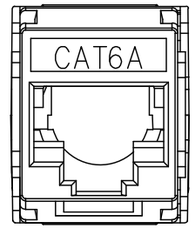

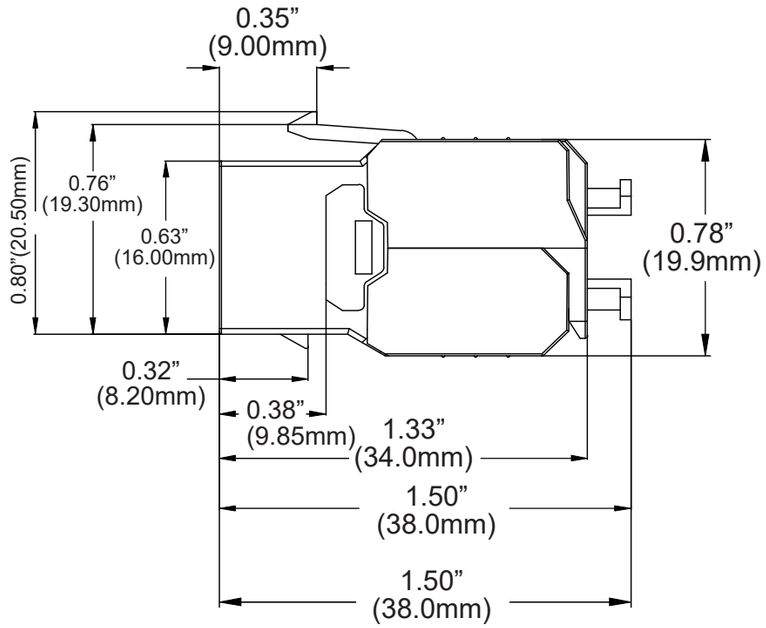

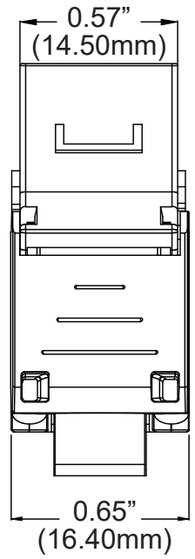

TYPE:
1. CAT6A FTP TOOLLESS KEYSTONE JACK
2. COLOUR: SILVER
3. 110 TYPE IDC

ELECTRICAL:
1. CONTACT RESISTANCE: 20m OHM
2. INSULATION RESISTANCE: <= 500M OHM @100 V DC
3. WITHSTAND VOLTAGE: DC1000V AC700V RMS 60H_Z, IMIN
4. CAT6A PERMANENT LINK: CONFORM TO ANSI/TIA/EIA 568B. 2-10

ENVIRONMENTAL:
1. STORAGE: -40°/ +70°
2. OPERATION: -10°/ +60°

MECHANICAL:
1. METAL MATERIAL: ZINC ALLOY
2. IDC MATERIAL: NEW PC, ACCEPT 22-24AWG SOLID WIRE.
3. TERMINAL: PHOSPHOR BRONZE, TIN GOLD 50U’’
4. RJ45 CONTACT LIFE: 750 TIMES MIN
5. IDN LIFE: 250 TIMES MIN

NO.	PART NAME	SPECIFICATION DESCRIPTION	QTY	UNIT

MONOPRICE

DESCRIPTION :
Monoprice™ Entegrade Series Cat6/Cat6A Shielded RJ45 Toolless Die Cast 180-Degree Keystone Jack for 22-24AWG Solid Wire, Silver

PID # : 15680

DATE :	UNIT : MM	FILE NAME: