

SlimSelect™ Series
FULL-MOTION, ARTICULATING WALL MOUNT

Guaranteed to be 1.6" or closer to the wall

For 19" ~ 55" TV with VESA® patterns up to 400x400 and weighing up to 100 lbs.

VESA® Patterns Between 100x100mm to 400x400mm

Weight Capacity up to 100 lbs.

Display Sizes Between 19" ~ 55"

Extends from 1.2" ~ 17.8"

Any Wall Type Brick, Concrete, or Wood

Tilt Range +10°/-5°

Swivel Range ±50°

Rotation Range ±4°

Enhance your TV viewing experience with the SlimSelect™ Full-Motion Articulating Wall Mount. The sleek low profile design blends the TV in with the surrounding decor without compromising extension, tilt, swivel, and rotate movements. The sturdy construction can support displays weighing up to 100 pounds on wood stud, brick, or concrete walls. This bracket is designed for 19" ~ 55" displays with VESA® mounting patterns up to 400 x 400. These thinner and more agile mounts are ideal for displays with side or bottom facing connections.

Slim Design: The space saving, slim design places your TV just 1.2" out from the wall, but can be extended out to 17.8" to allow easy access to ports and cables, and to provide the space for 50° swivel angles.

Included Accessories: To make your mounting expereince as simple and complete as possible, we include a number of practical accessories and tools to make the job easier.

FULL MOTION

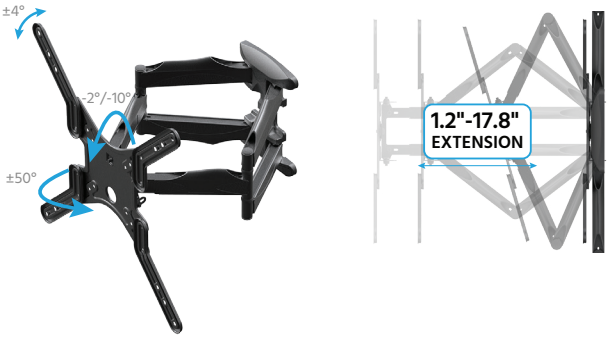

INCLUDED ACCESSORIES



Specifications

Model	39304
Minimum Display Size*	19"
Maximum Display Size*	55"
Maximum Display Weight	100 lbs. (28kg)
Minimum VESA®	100x100
Maximum VESA	400x400
Swivel Range	±50°
Tilt Range	-2°/+10°
Rotation Range	±4°
Minimum Extension	1.2"
Maximum Extension	17.8"
Wall Plate Dimensions	8.9" x 5.2" (225 x 132 mm)
Front Plate Dimensions	15.7" x 15.7" (400 x 400 mm)
Construction	Steel
Color	Black
Built-in Level	No
Cable Management	Yes
UL Certified	No
RoHS Compliant	Yes
Included Accessories	Mounting Hardware 1x 8ft Premium Slim HDMI® Cable 1x Carpenter Level 1x Cut-out Template 5x Hook-and-loop Cable Ties

*The minimum and maximum display sizes are only approximations. Your TV will work with this mount as long as it has a compatible VESA® pattern and maximum weight.

VESA® is a registered trademark of the Video Electronics Standards Association.

HDMI®, the HDMI Logo, and High-Definition Multimedia Interface are trademarks or registered trademarks of HDMI Licensing LLC in the United States and other countries.

• All trademarks are the sole property of their respective companies.
• Copyright © 2019 Monoprice, Inc. All rights reserved.