RoHS COMPLIANT

REVISION INFORMATION		
Rev.	Rev. Date	Brief Description

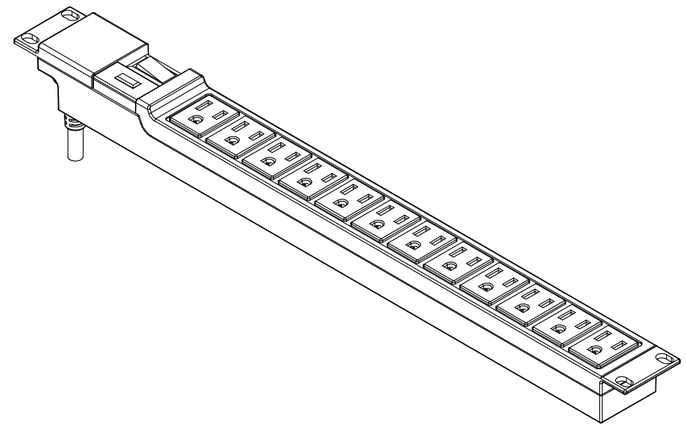

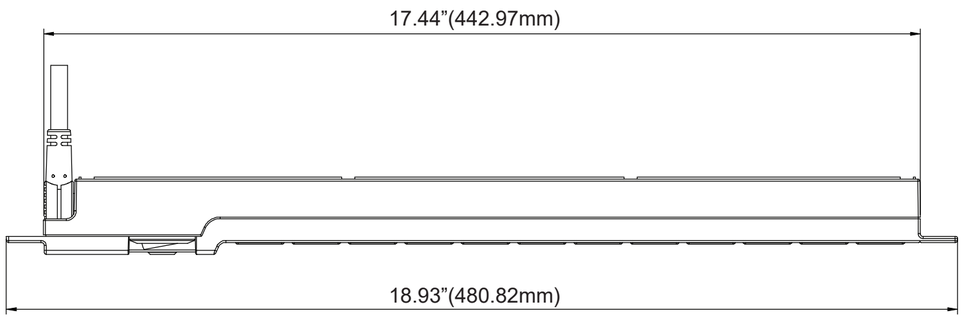

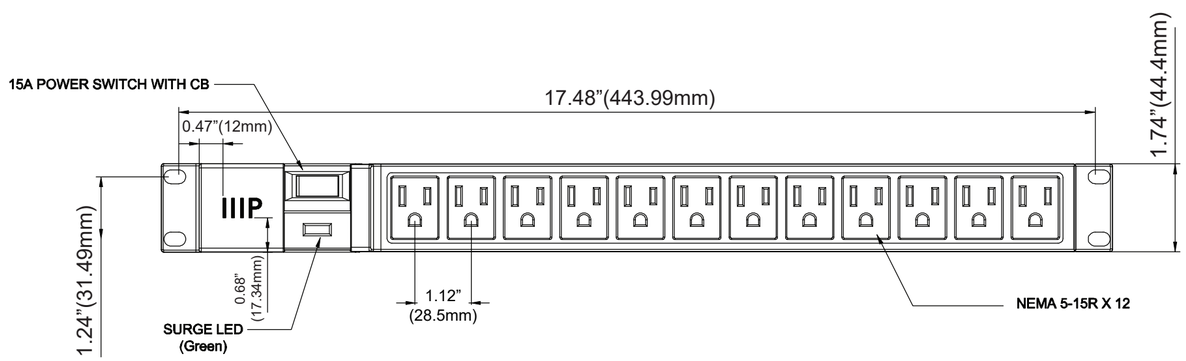

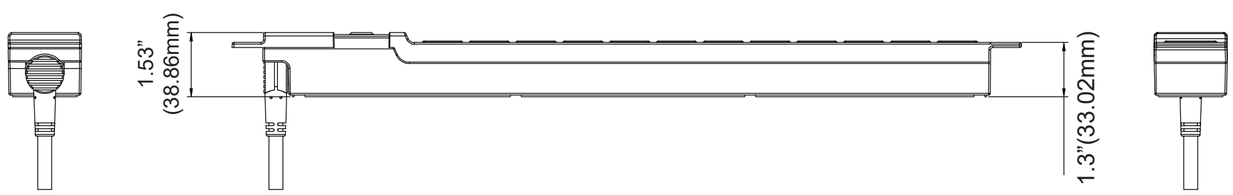

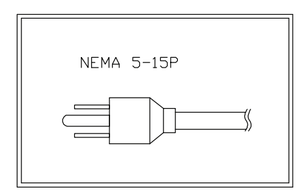

Housing..... Plastic
Mouting..... H
AC Rating Volts..... 120Vac
AC Rating Amps..... 12Amp
AC Rating Watts..... 1440W
AC Rating Frequency-Hz..... 60/50 HZ
Switch With Circuit Breaker..... 15A
Surge Level..... A3
Surge Indicator..... Green LED
Power Cable AWG.....14/3 SJT
Power Cable Length..... 6 ft
Power Indicator..... N/A
Plug Type..... NEMA 5-15P
Receptacle Type..... NEMA 5-15R
Receptacle Quantity..... 12
Max.Output Per Outlet..... 12Amp
UL Rating..... 60950-1
Certification/Agency Approvals..... UL&cUL

NO.	PART NAME	SPECIFICATION DESCRIPTION	QTY	UNIT

MONOPRICE

DESCRIPTION :
Monoprice™12 Outlet ABS Basic 1U Rackmount PDU Power Distribution Unit - NEMA 5-15R Surge-Protected Socket Outlets, 1050 Joules, 6ft Cord

PID # : 40001

DATE :

UNIT : IN / MM

FILE NAME: