RoHS COMPLIANT

REVISION INFORMATION		
Rev.	Rev. Date	Brief Description

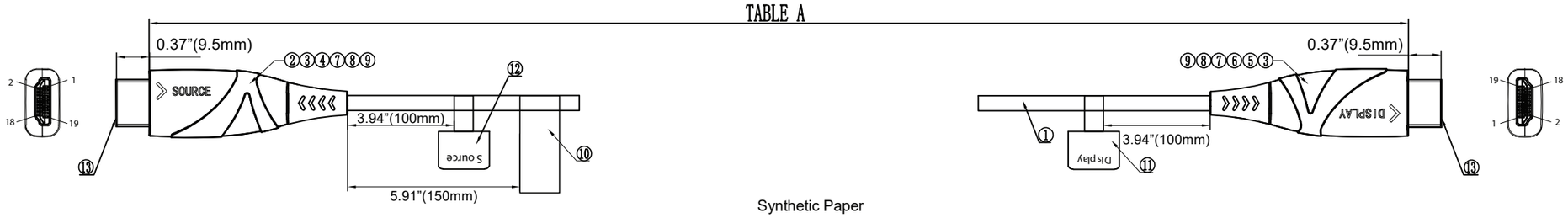

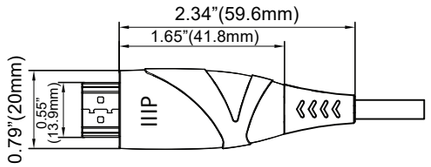

Synthetic Paper

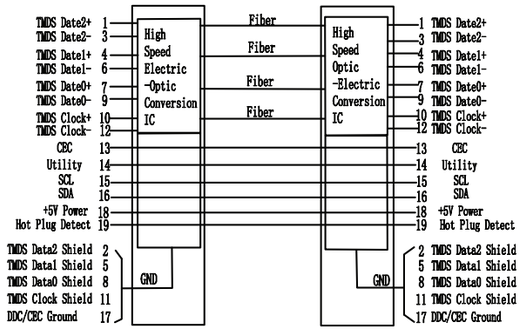

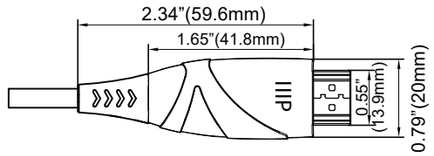

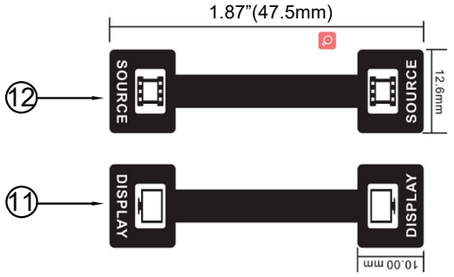

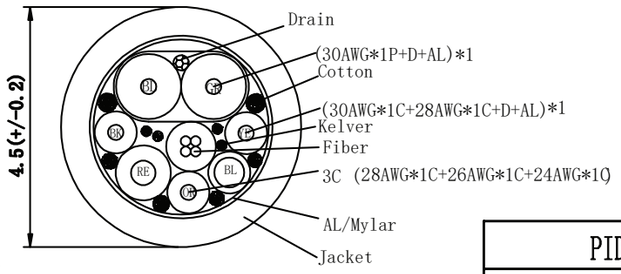

1.100% Materials Meet to RoHS&Reach Standard
2.100% 4K 60HZ And HDR TV UHD Display Test
3. No External Power Needed
4. Bend Radius(Dynamic/Static)80mm/40mm
5. 0perating and Storage Temp -40-70 Degree

NO.	SPECIFICATION DESCRIPTION	QTY	UNIT
13	Connector Caps	2	PCS
12	Source mark label	1	PCS
11	Display mark label	1	PCS
10	QR Code Label	1	PCS
9	Screw	4	PCS
8	Clip	2	PCS
7	SR black	2	PCS
6	HDMI AM Zinc Alloy Upper Shell Shining Black (Display)	1	PCS
5	HDMI AM PCBA (Display)	1	PCS
4	HDMI AM Zinc Alloy Upper Shell Shining Black (Source)	1	PCS
3	HDMI AM Zinc Alloy Bottom Shell Shining Black	2	PCS
2	HDMI AM PCBA (Source)	1	PCS
1	(30AWG*1P(Tinned copper)+D+AL)*1+((30AWG*1C+28AWG*1C(Tinned copper))+D+AL)+28AWG*1C(Tinned copper) +26AWG*1C(Tinned copper)+24AWG*1C(Tinned copper))+Fiber(OM3/125) +F+AL OD: 4.5±0.20 UL-BK01/60P Black PVC	TABLE A	ft

TABLE A

PID	Length(ft)
43331	49ft
43332	65ft
43333	98ft

MONOPRICE

DESCRIPTION :
Monoprice™ 4K High Speed Fiber Optic HDMI Cable - 4K@60Hz, 18Gbps, HDR, Active Optical Cable (AOC), Black

PID # : 43331, 43332, 43333

DATE :

UNIT : IN / MM

FILE NAME: