RoHS COMPLIANT

REVISION INFORMATION		
Rev.	Rev. Date	Brief Description
V1	11/26/2022	Initial_Issue
V2		

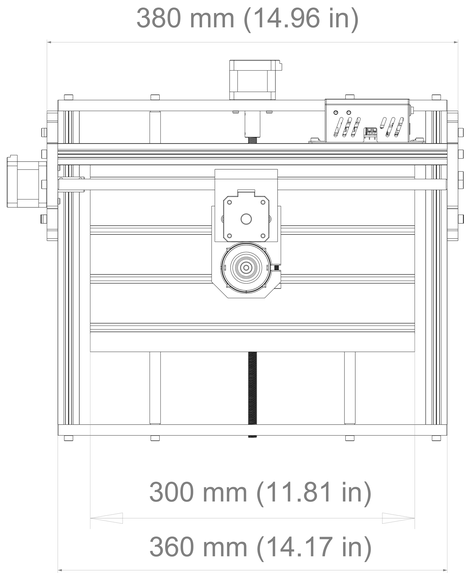

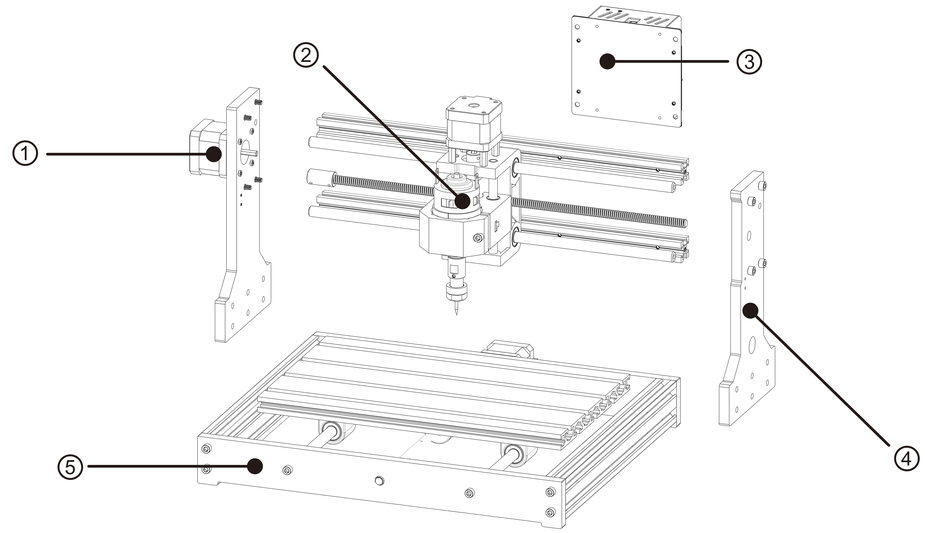

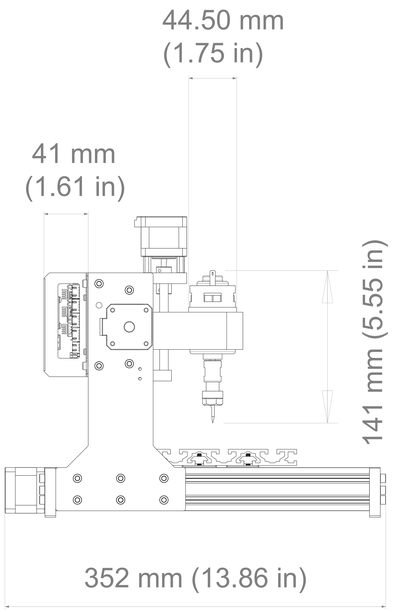

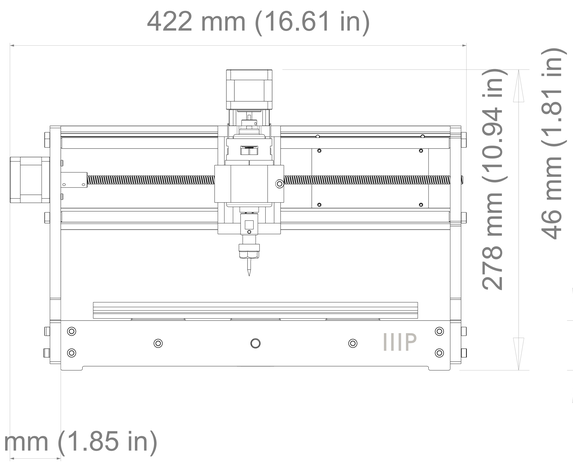

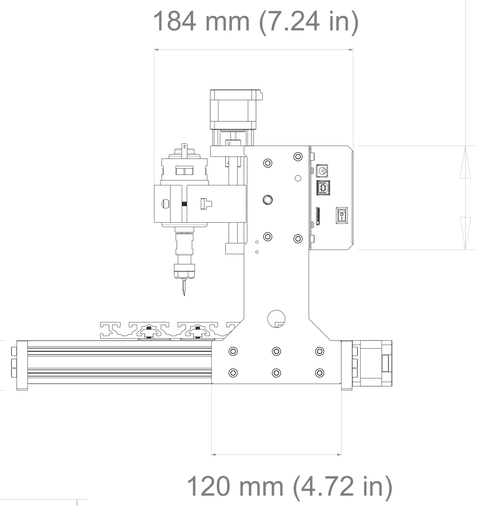

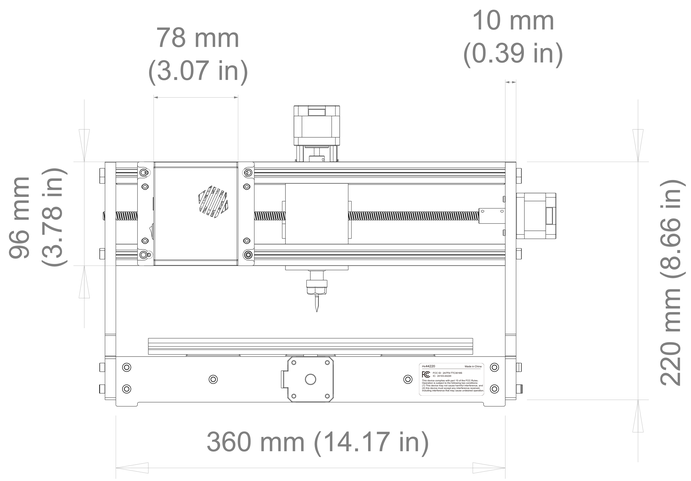

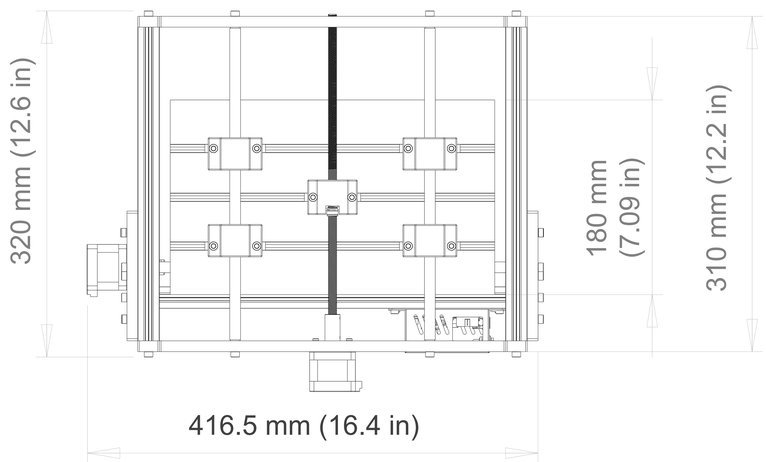

NO.	PART NAME	SPECIFICATION DESCRIPTION		
5	Base	360 x 320 x 46(mm) / 14.17 x 12.6 x 1.81(in)	1	
4	Right part	120 x 220 x 10(mm) / 4.72 x 8.66 x 0.39(in)	1	
3	Motherboard Components	78 x 96 x 41(mm) / 3.07 x 3.78 x 1.61(in)	1	
2	Spindle motor (with tool)	44.5 x 44.5 x 141(mm) / 1.75 x 1.75 x 5.55(in)	1	
1	Left part (with X-axis motor)	120 x 220 x 47(mm) / 4.72 x 8.66 x 1.85(in)	1	

MONOPRICE

DESCRIPTION :

Monoprice Benchtop CNC Router Engraver/Carver Kit

PID # : 44220

DATE :	UNIT :	FILE NAME:
2022/11/26	mm/in	PID_PRODUCT