RoHS COMPLIANT

VERSION INFORMATION (Vendor)			
Rev.	Rev. Date	Modified by	Brief Description

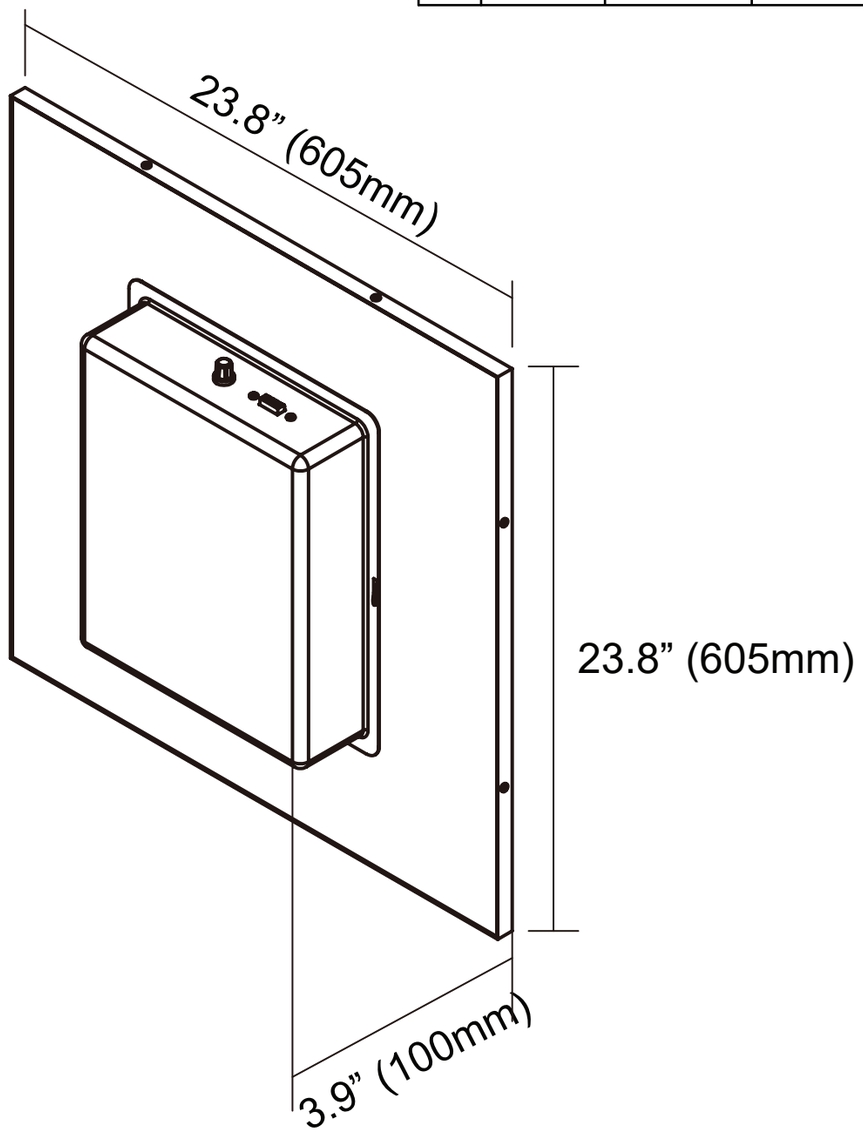

Dimensions: 23.8"x23.8"x3.9"(605X605XH100 mm)
Weight: 13.6lbs(6.2Kg)
Mounting Depth(without dry wall): ＞3.6"(＞100mm)
Frequency Response: 75Hz-20kHz
Sensitivity(1M/1W): 92dB
Nominal Impedance: 8Ω
RMS Power: 40W
Transformer: 70V: 1.5W-2.5W-5W-10W-8Ω 100V: 2.5W-5W-10W-N/A-8Ω

NO.	PART NAME	SPECIFICATION DESCRIPTION	QTY	UNIT

MONOPRICE

DESCRIPTION :
Monoprice™ 70V 24in x 24in T-Bar Tile Music & Paging Speaker

PID # : 44950

DATE :

UNIT : IN (MM)

FILE NAME: