RoHS COMPLIANT

REVISION INFORMATION		
Rev.	Rev. Date	Brief Description

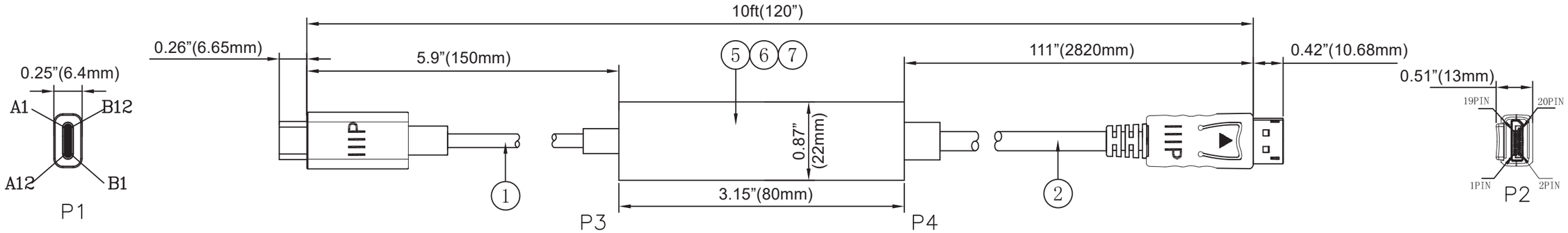

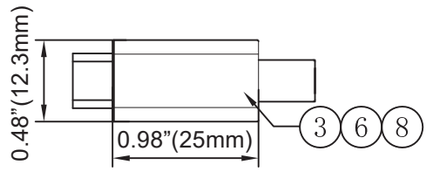

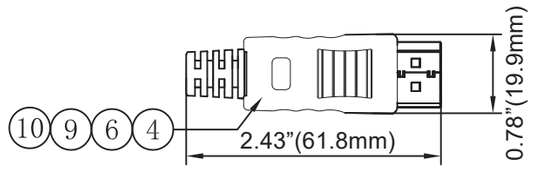

Pin Assignment

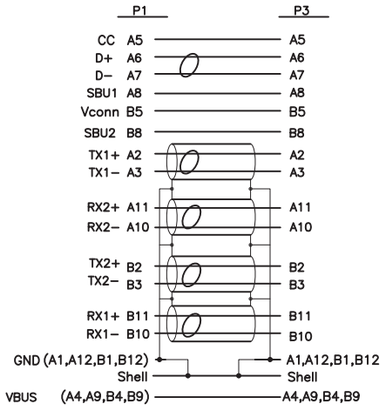

Pin Assignment

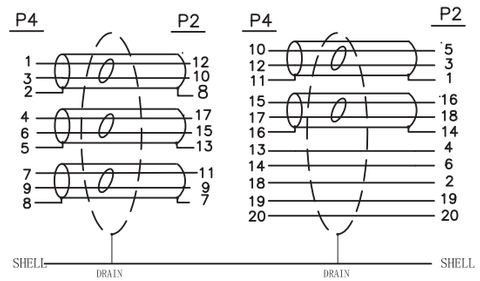

Electrical Test:
1、100% Test(open,short,miss wire)

FEATURES:
- Supports Type-C input and DisplayPort output
- Supports DisplayPort 1.4/1.2 Alt mode
- Supports DisplayPort resolution up to 7680*4320@60Hz;4K@240Hz
- Bandwidth：32.4G
- Support 8/10/12 bit color depth
- Pixel format RGB/YCbCr4:4:4/4:2:2/4:2:0

NO.	PART NAME	SPECIFICATION DESCRIPTION	QTY	UNIT
8	CAP	DP DUST CAP	1	PCS
7	CONN	DisplayPort Port MALE CONNECTOR~SHELL GOLD PLATED~PIN GOLD~WITH LOCKING	1	PCS
8	CONN	USB-C MALE CONNECTOR~SHELL GOLD PLATED~PIN GOLD~WITH PCB	1	PCS
7	PCBA	UTC-DP-3M-L~PCB+SMT	1	PCS
6	Molding	PVC~Black	VR	g
5	SHELL	UTC-DP-3M-L SHELL~ABS~BLACK	1	PCS
4	SHELL	DP SHELL~ABS~BLACK	1	PCS
3	SHELL	USB-C SHELL~ABS~BLACK	1	g
2	WIRE	DP~(7/0. 127TA*1PR+EAM)*5+7/0. 127TA*5C+AEB(AL)85%~0D:7. 3MM~BLACK~PVC~NO MARKING	2.85	M
1	WIRE	USB 3.2~[34AWG(7/0. 06TC)+EAM]*4P+34AWG(7/0. 06TC)*2C+28AWG(7/0. 127TC)*2C+34AWG (7/0. 06TC)*4C+AB(75%TC)~0D3. 9MM~BLACK~PVC~NO MARKING	0.2	M

MONOPRICE

DESCRIPTION :
Monoprice™ USB-C to DisplayPort 1.4 Cable - 8K60Hz, Passive, HDR, 10ft, Black

PID # : 47794

DATE : 2025/05/21 | UNIT : IN/MM/FT | FILE NAME: