RoHS COMPLIANT

VERSION INFORMATION			
Rev.	Rev. Date	Modified by	Brief Description

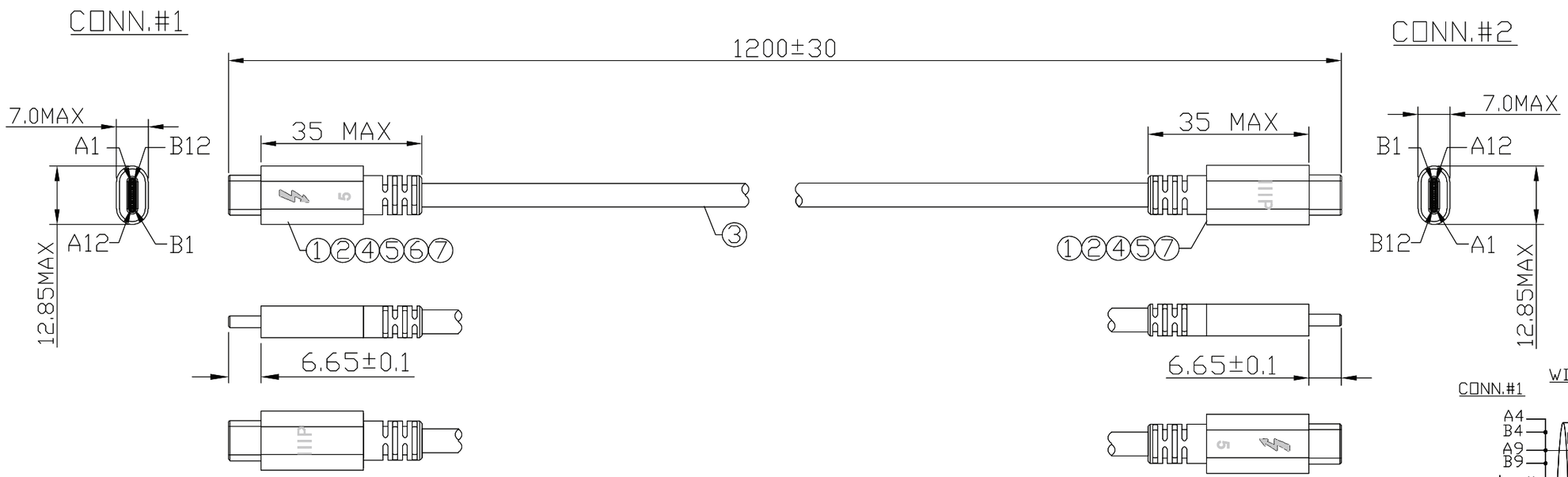

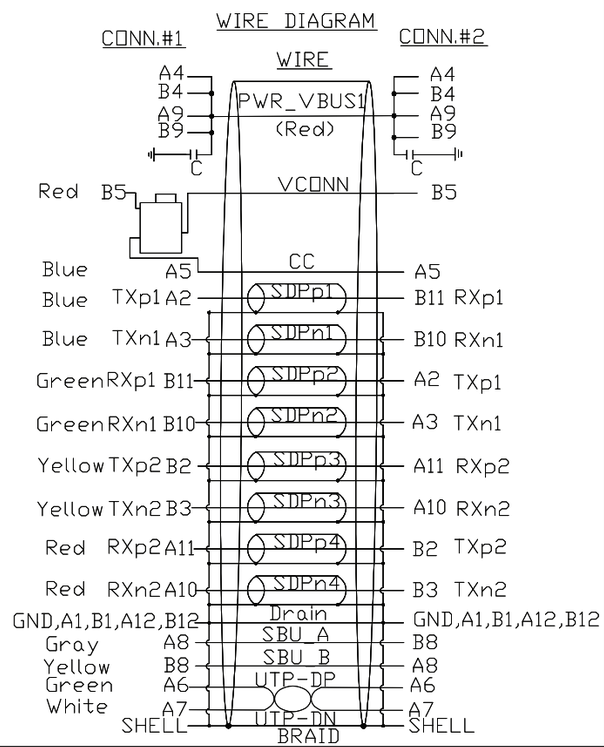

EMARK IC INFORMATION

ITEM	TEST INFORMATION	PARAMETERS
1	USB Vendor ID	060F
2	USB-IF assigned XID	2120
3	USB Product ID	272B
4	Product Type	011-Passive Cable
5	Cable Latency	0001-<10ns (~1m)
6	Cable Termination Type	00-Both ends Passive, VCONN not required
7	SuperSpeed Signling Support	100-USB4 GEN4 2*40Gbps
8	EPR Mode Capable	1-Cable is EPR Mode Capable
9	Maximum VBUS Voltage	11-50V
10	VBSU Current Capability	10-5.0A

ELECTRICAL TEST:

1. 100% OPEN & SHORT TEST
2. CONNECTION RESISTANCE: 8.0 Ohm(Max)
3. INSULATION RESISTANCE: 10M Ohm(min) AT 300VDC/10ms (EXCEPT A4, A9, B4, B9, A5, B5)
4. A4, A9, B4, B9 TO GND CAPACITOR: 8-500nF

NOTE:

1. THIS PRODUCT MEET RoHS+REACH+HF STANDARD ENVIRONMENTAL PROTECTION POLICY.
2. THE DIMENSIONAL TOLERANCE OF ONE DECIMAL POINT ON THE DRAWING IS ±0.5MM, AND THAT OF TWO DECIMAL POINTS IS ±0.25MM.

NO.	PART NAME	SPECIFICATION DESCRIPTION	QTY	UNIT
7	Boot Plastics	Plastics Color: Black	2	EA
6	IC	Emark IC	1	EA
5	Capacitor	SMT 0402 8 - 500nF	2	EA
4	PCB	PCB FR-4	2	EA
3	Cable	(#30*1C+S+CU+MY)*8+(#34*1P+#22*1C)+#32*4C+ASS OD: 4.9mm TPE BLACK	1.25	M
2	Overmold	TPE Color: Black	A/R	G
1	Conn. #1&2	USB4 Type C (Male), Terminal Gold Plated, Shell: NI Plated	2	EA

MONOPRICE

DESCRIPTION :

Monoprice™ Thunderbolt 5 80Gbps, 240W Charging, 8K Video, 1.2M

PID # : 49893

DATE :

UNIT : MM

FILE NAME: